LOT 61
IN OR 2229/1260
ESMT PT OR 2176/356

TATE KENNETH J & RENEE
225 MORNING RAY WAY
YULEE, FL 32097

2023

44-2N-27-1000-0061-0000

BUILDING CHARACTERISTICS

ELEMENT	CD	CONSTRUCTION
Exterior Wall	10	ABOVE AVG 100
Roof Structur	03	GABLE/HIP 100
Roof Cover	03	COMP SHNGL 100
Interior Wall	05	DRYWALL 100
Interior Floo	12	HARDWOOD 70
Interior Floo	11	CLAY TILE 30
Air Condition	03	CENTRAL 100
Heating Type	04	AIR DUCTED 100
Bedrooms		4 100
Bathrooms		3 100
Frame	02	WOOD FRAME 100
Stories	1.5	1.5 100
Units		0 100
Occupancy	00	NONE 100
Quality	03	Quality Level 03
DOR CODE	0100	SINGLE FAMILY
MAP NUM		MKT AREA 04
NEIGHBORHOOD/LOC	4086.00	

AREA TYPE	TOTAL GROSS AREA	PCT OF BASE	TOT ADJ AREA	SUBAREA MARKET VALUE
BAS	2,167	100	2,167	271,443
FGR	621	55	342	42,840
FOP	184	30	55	6,889
FSP	170	40	68	8,518
FUS	516	100	516	64,636
STR	44	10	4	501
TOTALS	3,702		3,152	394,827

MARKET ADJUSTMENTS

TYPE	MDL	EFF. AREA	TOT ADJ PTS	EFF. BASE RATE	REPL. COST NEW	AYB	EYB	ECON	FNCT		NORM	% COND
0900	01	3,152	107.0880	127.17	400,840	2018	2018	0	0	0	1.50	98.50

1 SNGL FAM – 100% - 2019 Heated Area: 2683 HX Base Yr

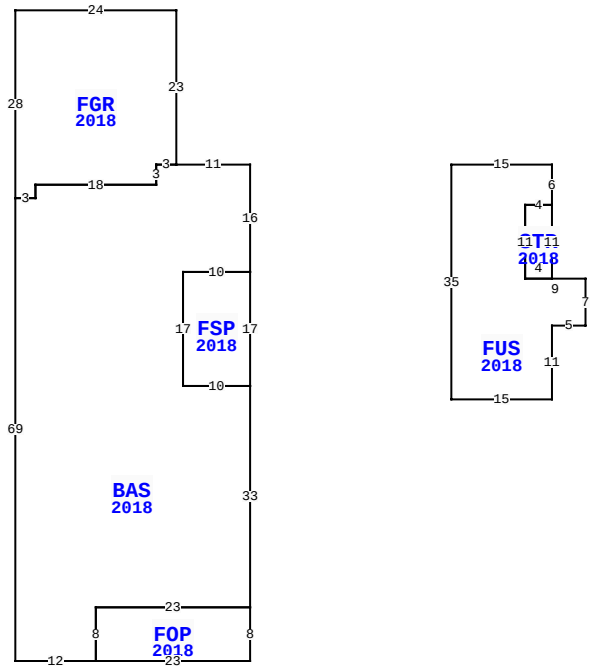

225 MORNING RAY WAY, YULEE

BLD DATE	04/04/2022 NW	LGL DATE	
XF DATE		LAND DATE	
INC DATE		AG DATE	

NASSAU COUNTY PROPERTY

PAGE 1 of 1 4

VALUATION SUMMARY

VALUATION BY		STANDARD
Tax Group: 4	Tax Dist:	
BUILDING MARKET VALUE		394,827
TOTAL MARKET OB/XF VALUE		11,584
TOTAL LAND VALUE - MARKET		60,000
TOTAL MARKET VALUE		466,411
SOH/AGL Deduction		0
ASSESSED VALUE		466,411
TOTAL EXEMPTION VALUE	13	466,411
BASE TAXABLE VALUE		0
TOTAL JUST VALUE		466,411
NCON VALUE		0
INCOME VALUE		
PREVIOUS YEAR MKT VALUE		367,185

PERMIT NUM	DESCRIPTION	AMT	ISSUED
18010236	CO ISSUED	0	10/09/2018
18005059	NEW CONSTR	352,512	05/18/2018

SALES DATA

OFF RECORD Number	DATE	TYPE INST	Q / U	V / I	RSN CD	SALE PRICE
2229/1260	10/09/2018	WD	Q	I	01	407,800
GRANTOR: D S WARE HOMES LLC						
GRANTEE: TATE KENNETH J & RE						
2203/1180	6/13/2018	QC	U	V	11	100
GRANTOR: RAYDIENT LLC D/B/A RA						
GRANTEE: WILDLIGHT LLC ET AL						

BUILDING NOTES

BUILDING DIMENSIONS

BAS=[YR=2018] W11 FGR=[YR=2018] N23 W24 S28 E3 N2 E18 N3 E3 $ W3 S3 W18 S2 W3 S69 E12 FOP=[YR=2018] E23 N8 W23 S8 $ N8 E23 N33 FSP=[YR=2018] N17 W10 S17 E10 $ W10 N17 E10 N16 $ PTR= E30 FUS=[YR=2018] E15 S6 STR=[YR=2018] S11 W4 N11 E4$ W4 S11 E9 S7 W5 S11 W15 N35$ W30 $.

EXTRA FEATURES

LN	OB/XF CODE	DESCRIPTION	BLD	CAP	L	W	UNITS	UT	Adj R	ADJ UNIT PRICE	ORIG COND	YEAR ON	YEAR ACTUAL	Q	% COND	OB/XF MKT VALUE	NOTES
1	0855	CONC PAVER	0	100	0	0	1,182.00	SF	10.00	10.00	100	2018	2018	3	98	11,584	

LAND DESCRIPTION

TOTAL OB/XF 11,584

LN	USE CODE	CLS	LAND USE DESCRIPTION	CAP	RD	LOC ZONE	FRONT	DEPTH	TOT LND UTS	UNIT TYPE	DT	DPTH FACT	% COND	TOT ADJ	UNIT PRICE	ADJ UNIT PRICE	LAND VALUE	OTHER ADJUSTMENTS AND NOTES	YEAR	DENSITY	DECL	FRZ	YR	CONSRV
1	000100	C	SFR	100			0.00	0.00	1.00	LT		1.00	1.00	1.00	60,000.00	60,000.00	60,000							

REVIEW DATE 08/22/2019 BY KWX Total Acres: 0.00 Total Land Value: 60,000 Market: 0 Agricultural: 0 Common: 60,000 PRINTED 08/02/2023 BY SYS