LOT 56
ESMT PT OR 2176/356
EAST NASSAU-WILDLIGHT PHASE 1A

BARKER RYAN & CHANLI ALEXIS
220 MORNING RAY WAY
YULEE, FL 32097

2023

44-2N-27-1000-0056-0000

NASSAU COUNTY PROPERTY

BUILDING CHARACTERISTICS

ELEMENT	CD	CONSTRUCTION
Exterior Wall	10	ABOVE AVG 100
Roof Structur	03	GABLE/HIP 100
Roof Cover	03	COMP SHNGL 100
Interior Wall	05	DRYWALL 100
Interior Floo	12	HARDWOOD 50
Interior Floo	14	CARPET 50
Air Condition	03	CENTRAL 100
Heating Type	04	AIR DUCTED 100
Bedrooms		3 100
Bathrooms		2.5 100
Frame	02	WOOD FRAME 100
Stories	2.	2. 100
Units		0 100
Occupancy	00	NONE 100
Quality	03	Quality Level 03

DOR CODE	0100	SINGLE FAMILY	
MAP NUM		MKT AREA	04
NEIGHBORHOOD/LOC	4086.00		

AREA TYPE	TOTAL GROSS AREA	PCT OF BASE	TOT ADJ AREA	SUBAREA MARKET VALUE
BAS	1,022	100	1,022	124,803
FDG	576	60	346	42,252
FOP	88	30	26	3,175
FOP	100	30	30	3,664
FUS	368	100	368	44,939
FUS	1,082	100	1,082	132,130
TOTALS	3,236		2,874	350,963

MARKET ADJUSTMENTS

TYPE	MDL	EFF. AREA	TOT ADJ PTS	EFF. BASE RATE	REPL. COST NEW	AYB	EYB	ECON	FNCT		NORM	% COND
0900	01	2,874	103.8700	123.35	354,508	2019	2019	0	0	0	1.00	99.00

1 SNGL FAM – 0% - 2023 Heated Area: 2472 HX Base Yr

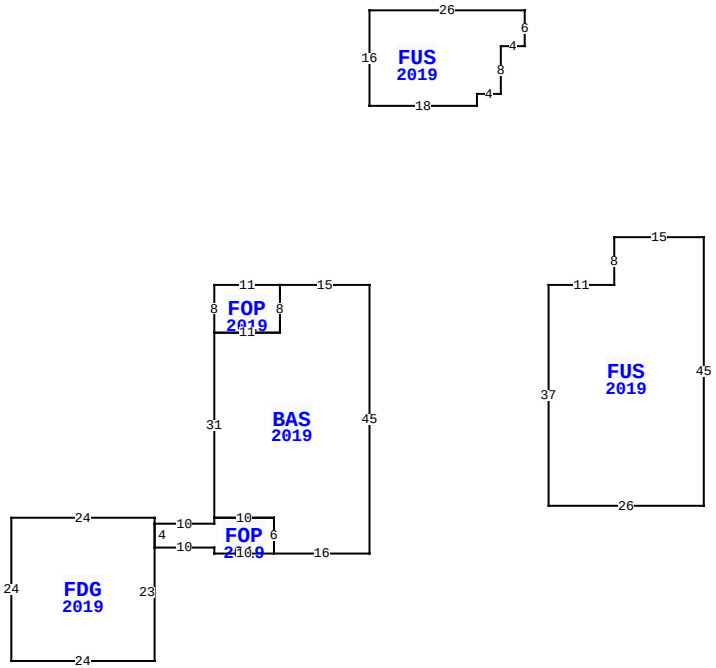

220 MORNING RAY WAY, YULEE

BLD DATE	04/04/2022 NW	LGL DATE	
XF DATE		LAND DATE	
INC DATE		AG DATE	

VALUATION SUMMARY

VALUATION BY	STANDARD
Tax Group: 4	Tax Dist:
BUILDING MARKET VALUE	350,963
TOTAL MARKET OB/XF VALUE	2,930
TOTAL LAND VALUE - MARKET	60,000
TOTAL MARKET VALUE	413,893
SOH/AGL Deduction	0
ASSESSED VALUE	413,893
TOTAL EXEMPTION VALUE	0
BASE TAXABLE VALUE	413,893
TOTAL JUST VALUE	413,893
NCON VALUE	0
INCOME VALUE	
PREVIOUS YEAR MKT VALUE	328,938

PERMIT NUM	DESCRIPTION	AMT	ISSUED
18009593	NEW CONSTR	298,722	09/20/2018
18006850	GARAGE	26,768	01/01/2018

SALES DATA

OFF RECORD Number	DATE	TYPE INST	Q U /	V I /	RSN CD	SALE PRICE
2551/0057	3/28/2022	WD	Q	I	01	485,000
GRANTOR: FIELDS MATTHEW B & MA						
GRANTEE: BARKER RYAN & CHANL						
2350/1854	3/27/2020	WD	Q	I	01	370,000
GRANTOR: D S WARE HOMES LLC						
GRANTEE: FIELDS MATTHEW B &						

BUILDING NOTES

BUILDING DIMENSIONS

BAS=[YR=2019] W15 FOP=[YR=2019] W11 S8 E11 N8 $ S8 W11 S31 FOP=[YR=2019] S1 W10 FDG=[YR=2019] N1 W24 S24 E24 N23 $ S4 E10 S1 E10 N6 W10$ E10 S6 E16 N45 $ PTR= E30 FUS=[YR=2019] E11 N8 E15 S45 W26 N37 $ W30 PTR= N30 FUS=[YR=2019] N16 E26 S6 W4 S8 W4 S2 W18 $ S30$.

EXTRA FEATURES

LN	OB/XF CODE	DESCRIPTION	BLD	CAP	L	W	UNITS	UT	Adj R	ADJ UNIT PRICE	ORIG COND	YEAR ON	YEAR ACTUAL	Q	% COND	OB/XF MKT VALUE	NOTES
1	0855	CONC PAVER	0	0	0	0	256.00	SF	10.00	10.00	100	2019	2019	3	99	2,534	
2	0855	CONC PAVER	0	0	0	0	40.00	SF	10.00	10.00	100	2019	2019	3	99	396	

LAND DESCRIPTION

TOTAL OB/XF 2,930

LN	USE CODE	CLS	LAND USE DESCRIPTION	CAP	RD	LOC ZONE	FRONT	DEPTH	TOT LND UTS	UNIT TYPE	DT	DPTH FACT	% COND	TOT ADJ	UNIT PRICE	ADJ UNIT PRICE	LAND VALUE	OTHER ADJUSTMENTS AND NOTES	YEAR	DENSITY	DECL	FRZ	YR	CONSRV
1	000100	C	SFR	0			0.00	0.00	1.00	LT		1.00	1.00	1.00	60,000.00	60,000.00	60,000							

REVIEW DATE 04/30/2019 BY DJKW Total Acres: 0.00 Total Land Value: 60,000 Market: 0 Agricultural: 0 Common: 60,000 PRINTED 08/02/2023 BY SYS