LOT 5
PIRATES WOOD ESTATES PB 5/273

SUMNER GINGER/SMIGIELSKI CHRISTOPHER
97003 KATFISH DRIVE
YULEE, FL 32097

2023

43-3N-28-509G-0005-0000

BUILDING CHARACTERISTICS

ELEMENT	CD	CONSTRUCTION
Exterior Wall	06	BD/BATTEN 50
Exterior Wall	31	HARDIE BRD 50
Roof Structur	03	GABLE/HIP 100
Roof Cover	03	COMP SHNGL 100
Interior Wall	05	DRYWALL 100
Interior Floo	11	CLAY TILE 50
Interior Floo	14	CARPET 50
Air Condition	03	CENTRAL 100
Heating Type	04	AIR DUCTED 100
Bedrooms		2 100
Bathrooms		2 100
Frame	02	WOOD FRAME 100
Stories	2.	2. 100
Units		0 100
Occupancy	00	NONE 100
Quality	03	Quality Level 03
DOR CODE	0100	SINGLE FAMILY
MAP NUM		MKT AREA 04
NEIGHBORHOOD/LOC	4032.00	

AREA TYPE	TOTAL GROSS AREA	PCT OF BASE	TOT ADJ AREA	SUBAREA MARKET VALUE
BAS	1,353	100	1,353	149,591
DCK	529	10	53	5,860
FUS	838	100	838	92,651
STR	40	10	4	442
UOP	88	20	18	1,990
UOP	340	20	68	7,519
UOP	88	20	18	1,990
UOP	123	20	25	2,764
TOTALS	3,399		2,377	262,807

MARKET ADJUSTMENTS

TYPE	MDL	EFF. AREA	TOT ADJ PTS	EFF. BASE RATE	REPL. COST NEW	AYB	EYB	ECON	FNCT		NORM	% COND
0900	01	2,377	107.8000	128.01	304,280	2000	2000	0	0	0	13.63	86.37

1 SNGL FAM – 100% - 2023 Heated Area: 2191 HX Base Yr 2023

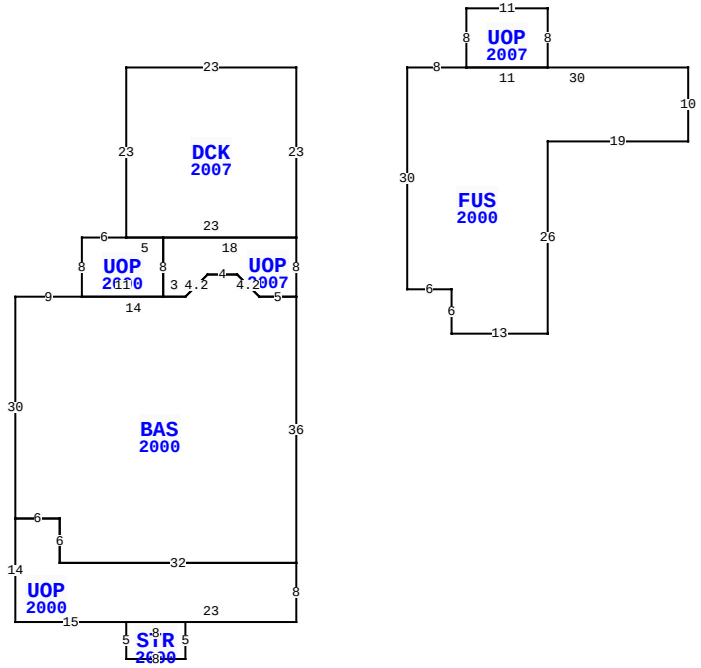

97003 KATFISH DR, YULEE

BLD DATE		LGL DATE	
XF DATE		LAND DATE	06/16/2023 MLU
INC DATE		AG DATE	

NASSAU COUNTY PROPERTY

PAGE 1 of 1 4

VALUATION SUMMARY

VALUATION BY		STANDARD
Tax Group: 4	Tax Dist:	
BUILDING MARKET VALUE		262,807
TOTAL MARKET OB/XF VALUE		9,942
TOTAL LAND VALUE - MARKET		170,000
TOTAL MARKET VALUE		442,749
SOH/AGL Deduction		55,009
ASSESSED VALUE		387,740
TOTAL EXEMPTION VALUE	HX HB	50,000
BASE TAXABLE VALUE		337,740
TOTAL JUST VALUE		442,749
NCON VALUE		0
INCOME VALUE		
PREVIOUS YEAR MKT VALUE		350,714

PERMIT NUM	DESCRIPTION	AMT	ISSUED
B25218	ELEC OTHER	0	07/01/2012
B24260	CARPORT	15,754	01/01/2011
9905800	NEW CONSTR	111,086	02/01/1999

SALES DATA

OFF RECORD Number	DATE	TYPE INST	Q U	V I	RSN CD	SALE PRICE
2594/0554	9/26/2022	WD	Q	I	01	529,000
GRANTOR: JAX FREEDOM HOME BUYE						
GRANTEE: SUMNER GINGER & CHR						
2569/0702	5/26/2022	WD	Q	I	01	365,000
GRANTOR: WOODS KERRY S						
GRANTEE: JAX FREEDOM HOME BU						

BUILDING NOTES

BUILDING DIMENSIONS

DCK=[YR=2007] W23 S23 UOP=[YR=2000] W6 S8 BAS=[YR=2000] W9 S30 UOP=[YR=2000] S14 E15 STR=[YR=2000] S5 E8 N5 W8$ E23 N8 W32 N6 W6$ E6 S6 E32 N36 UOP=[YR=2007] N8 W18 S8 E3 R3 U3 E4 D3 R3 E5$ W5 L3 U3 W4 D3 L3 W14$ E11 N8 W5$ E23 N23 $ PTR=E15 FUS=[YR=2000] E8 UOP=[YR=2007] N8 E11 S8 W11$ E30 S10 W19 S26 W13 N6 W6 N30$ W15$.

EXTRA FEATURES

LN	OB/XF CODE	DESCRIPTION	BLD	CAP	L	W	UNITS	UT	Adj R	ADJ UNIT PRICE	ORIG COND	YEAR ON	YEAR ACTUAL	Q	% COND	OB/XF MKT VALUE	NOTES
1	0940	SHEDS/PORT	0	100	16	12	192.00	SF	30.00	30.00	100	1999	1999	3	20	1,152	
3	0810	CONCRETE A	0	100	4	3	12.00	SF	6.50	6.50	100	2000	2000	3	80	62	
4	1242	WD DECK A	0	100	4	3	12.00	SF	10.00	10.00	100	2000	2000	3	20	24	
6	0300	BOAT DCK W	0	100	4	30	120.00	SF	40.00	40.00	100	2001	2001	3	30	1,440	
7	0350	CARPORT WD	0	100	0	0	472.00	SF	13.00	13.00	100	2013	2013	3	65	3,988	
8	0940	SHEDS/PORT	0	100	12	14	168.00	SF	30.00	30.00	100	2013	2013	3	65	3,276	

LAND DESCRIPTION

TOTAL OB/XF 9,942

LN	USE CODE	CLS	LAND USE DESCRIPTION	CAP	RD	LOC ZONE	FRONT	DEPTH	TOT LND UTS	UNIT TYPE	DT	DPTH FACT	% COND	TOT ADJ	UNIT PRICE	ADJ UNIT PRICE	LAND VALUE	OTHER ADJUSTMENTS AND NOTES	YEAR	DENSITY	DECL	FRZ	YR	CONSRV
1	000131	C	SFR CANAL	100		RS-1	0.00	0.00	1.00	LT		1.00	1.00	1.00	170,000.00	170,000.00	170,000							

REVIEW DATE 10/25/2018 BY KW Total Acres: 0.00 Total Land Value: 170,000 Market: 0 Agricultural: 0 Common: 170,000 PRINTED 08/02/2023 BY SYS