LOT 43
IN OR 2500/1022
PIRATES WOOD 4 UNR

COMISFORD JENNIFER B & SHANE M
97046 PIRATES POINT RD
YULEE, FL 32097

2023

43-3N-28-509D-0043-0000

BUILDING CHARACTERISTICS

ELEMENT	CD	CONSTRUCTION
Exterior Wall	05	AVERAGE 50
Exterior Wall	17	CB STUCCO 50
Roof Structur	03	GABLE/HIP 100
Roof Cover	03	COMP SHNGL 100
Interior Wall	05	DRYWALL 100
Interior Floo	11	CLAY TILE 60
Interior Floo	13	LVT/LAMNT 40
Air Condition	03	CENTRAL 100
Heating Type	04	AIR DUCTED 100
Bedrooms		3 100
Bathrooms		3 100
Frame	03	MASONRY 100
Stories	2.	2. 100
Units		0 100
BUD8 Adjustme	04	DIST 01 100
Occupancy	00	NONE 100
Quality	06	Quality Level 06
DOR CODE	0100	SINGLE FAMILY
MAP NUM		MKT AREA 04
NEIGHBORHOOD/LOC	4032.00	

AREA TYPE	TOTAL GROSS AREA	PCT OF BASE	TOT ADJ AREA	SUBAREA MARKET VALUE
BAL	54	15	8	1,159
BAL	20	15	3	435
BAS	912	100	912	132,089
BAS	396	100	396	57,355
DCK	288	10	29	4,200
FGR	308	55	169	24,477
FOP	112	30	34	4,924
FUS	872	100	872	126,296
STR	56	10	6	869
STR	40	10	4	579
TOTALS	3,128		2,465	357,018

MARKET ADJUSTMENTS

TYPE	MDL	EFF. AREA	TOT ADJ PTS	EFF. BASE RATE	REPL. COST NEW	AYB	EYB	ECON	FNCT		NORM	% COND
0900	01	2,465	128.7264	152.86	376,800	1987	2011	0	0	0	5.25	94.75

1 SNGL FAM – 100% - 2022 Heated Area: 2180 HX Base Yr 2022

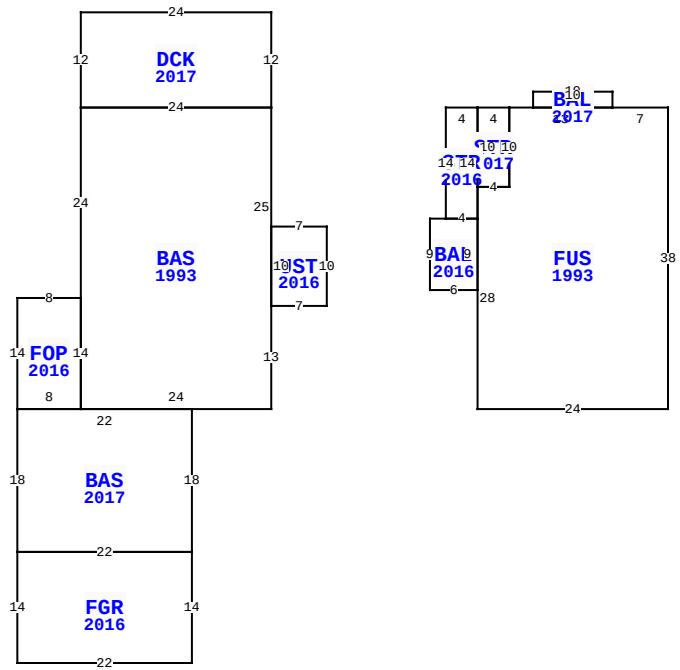

** This building has 11 Sub-Areas

97046 PIRATES POINT RD, YULEE

BLD DATE		LGL DATE	
XF DATE		LAND DATE	06/16/2023 MLU
INC DATE		AG DATE	

NASSAU COUNTY PROPERTY

PAGE 1 of 1 4

VALUATION SUMMARY

VALUATION BY		STANDARD
Tax Group: 4	Tax Dist:	
BUILDING MARKET VALUE		357,018
TOTAL MARKET OB/XF VALUE		60,248
TOTAL LAND VALUE - MARKET		170,000
TOTAL MARKET VALUE		587,266
SOH/AGL Deduction		102,318
ASSESSED VALUE		484,948
TOTAL EXEMPTION VALUE	HX HB	50,000
BASE TAXABLE VALUE		434,948
TOTAL JUST VALUE		587,266
NCON VALUE		0
INCOME VALUE		
PREVIOUS YEAR MKT VALUE		470,823

PERMIT NUM	DESCRIPTION	AMT	ISSUED
B1806341	SCRN ENCLSR	33,460	08/01/2018
B1807311	SWIM POOL	38,000	07/18/2018
B1706371	9 WINDOWS	4,215	10/01/2017
B1705764	REMODEL	12,000	09/01/2017
R1705239	REPAIR/RRF	0	08/01/2017
5982	GARAGE	10,272	09/12/1989

SALES DATA

OFF RECORD Number	DATE	TYPE INST	Q / U	V / I	RSN CD	SALE PRICE
2500/1022	9/23/2021	WD	Q	I	01	565,000
GRANTOR: WALL JAMES K & HALEY						
GRANTEE: COMISFORD JENNIFER						
2206/1991	6/27/2018	WD	Q	I	01	369,900
GRANTOR: BUSER STEPHEN & WENDY						
GRANTEE: WALL JAMES K & HALE						

BUILDING NOTES

EXTRA FEATURES

L N	OB/XF CODE	DESCRIPTION	BLD	CAP	L	W	UNITS	UT	Adj R	ADJ UNIT PRICE	ORIG COND	YEAR ON	YEAR ACTUAL	Q	% COND	OB/XF MKT VALUE	NOTES
1	0810	CONCRETE A	0	100	10	5	50.00	SF	6.50	6.50	100	1987	1987	3	54.5	177	
2	0810	CONCRETE A	0	100	0	0	320.00	SF	6.50	6.50	100	1990	1990	3	62	1,290	
3	0802	ASPHALT B	0	100	0	0	790.00	SF	2.40	2.40	100	2004	2004	3	56	1,062	
4	0911	SCRN RM A	0	100	35	39	1,365.00	SF	17.50	17.50	100	2018	2018	3	86	20,543	
5	0861	POOL GUNIT	0	100	26	14	364.00	SF	85.00	85.00	100	2018	2018	3	90	27,846	
6	0877	JACUZZI	0	100	0	0	1.00	UT	1,000.00	1,000.00	100	2018	2018	3	86	860	
7	0871	POOL HTR R	0	100	0	0	1.00	UT	2,000.00	2,000.00	100	2018	2018	3	86	1,720	
8	0845	KOOL DECK	0	100	0	0	950.00	SF	7.25	7.25	100	2018	2018	3	98	6,750	

BUILDING DIMENSIONS

DCK=[YR=2017] N12 W24 S12 E24$ BAS=[YR=1993] W24 S24 FOP=[YR=2016] W8 S14 BAS=[YR=2017] S18FGR=[YR=2016] S14 E22 N14 W22$ E22 N18 W22$ E8 N14$ S14 E24 N13 UST=[YR=2016] E7 N10 W7 S10$ N25$ PTR=E50 FUS=[YR=1993] W7 BAL=[YR=2017] N2 W10 S2 E10$ W13 STR=[YR=2017] W4 STR=[YR=2016] W4 S14 BAL=[YR=2016] W2 S9 E6 N9 W4$ E4 N14$ S10 E4 N10$ S10 W4 S28 E24 N38$ W50$.

LAND DESCRIPTION

TOTAL OB/XF 60,248

L N	USE CODE	CLS	LAND USE DESCRIPTION	CAP	R D	LOC ZONE	FRONT	DEPTH	TOT LND UTS	UNIT TYPE	D T	DPTH FACT	% COND	TOT ADJ	UNIT PRICE	ADJ UNIT PRICE	LAND VALUE	OTHER ADJUSTMENTS AND NOTES	YEAR	DENSITY	DECL	FRZ	YR	CONSRV
1	000131	C	SFR CANAL	100		RS-1	0.00	0.00	1.00	LT		1.00	1.00	1.00	170,000.00	170,000.00	170,000							

REVIEW DATE 11/01/2018 BY KW Total Acres: 0.00 Total Land Value: 170,000 Market: 0 Agricultural: 0 Common: 170,000 PRINTED 08/02/2023 BY SYS