LOT 12
IN OR 2232/1330
PIRATES WOOD #3 S/D UNR

CORMIER DIANE C
97356 LAFFITES WAY
YULEE, FL 32097

2023

43-3N-28-509C-0012-0000

BUILDING CHARACTERISTICS

ELEMENT	CD	CONSTRUCTION
Exterior Wall	30	VINYL 100
Roof Structur	03	GABLE/HIP 100
Roof Cover	03	COMP SHNGL 100
Interior Wall	05	DRYWALL 100
Interior Floo	13	LVT/LAMNT 100
Air Condition	03	CENTRAL 100
Heating Type	04	AIR DUCTED 100
Bedrooms		3 100
Bathrooms		2 100
Frame	02	WOOD FRAME 100
Stories	1.	1. 100
Units		0 100
Occupancy	00	NONE 100
Quality	03	Quality Level 03

DOR CODE 0100 SINGLE FAMILY
MAP NUM | MKT AREA 04
NEIGHBORHOOD/LOC 4032.00

AREA TYPE	TOTAL GROSS AREA	PCT OF BASE	TOT ADJ AREA	SUBAREA MARKET VALUE
BAS	1,651	100	1,651	209,624
FGR	304	55	167	21,204
FOP	32	30	10	1,270
PTO	100	5	5	635
TOTALS	2,087		1,833	232,731

MARKET ADJUSTMENTS

TYPE	MDL	EFF. AREA	TOT ADJ PTS	EFF. BASE RATE	REPL. COST NEW	AYB	EYB	ECON	FNCT		NORM	% COND
0900	01	1,833	108.0000	128.25	235,082	2019	2019	0	0	0	1.00	99.00

1 SNGL FAM – 100% - 2020 Heated Area: 1651 HX Base Yr 2020

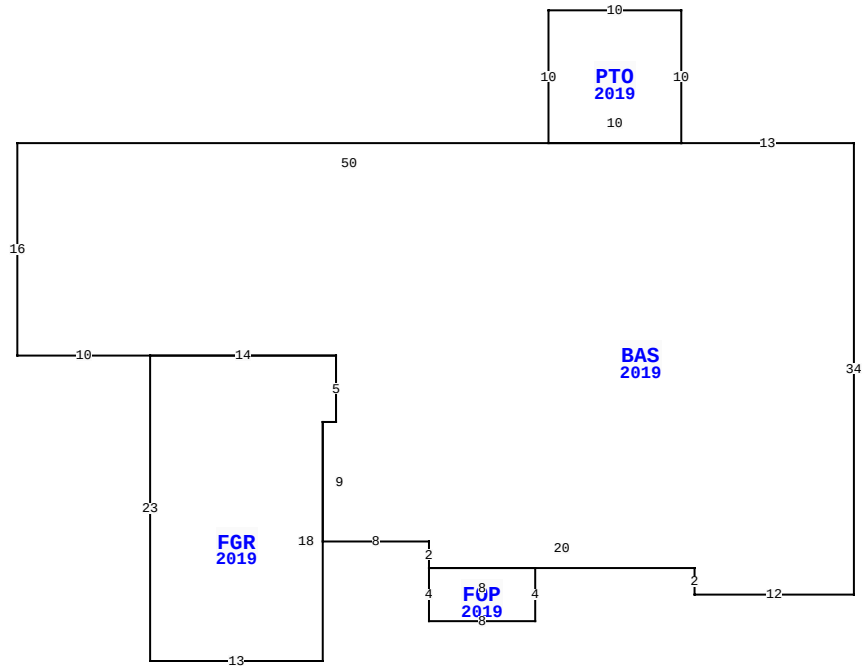

97356 LAFFITES WAY, YULEE

BLD DATE		LGL DATE	
XF DATE		LAND DATE	06/16/2023 MLU
INC DATE		AG DATE	

NASSAU COUNTY PROPERTY

PAGE 1 of 1 4

VALUATION SUMMARY

VALUATION BY		STANDARD
Tax Group: 4	Tax Dist:	
BUILDING MARKET VALUE		232,731
TOTAL MARKET OB/XF VALUE		6,622
TOTAL LAND VALUE - MARKET		95,000
TOTAL MARKET VALUE		334,353
SOH/AGL Deduction		141,844
ASSESSED VALUE		192,509
TOTAL EXEMPTION VALUE	HX HB	50,000
BASE TAXABLE VALUE		142,509
TOTAL JUST VALUE		334,353
NCON VALUE		0
INCOME VALUE		
PREVIOUS YEAR MKT VALUE		236,789

PERMIT NUM	DESCRIPTION	AMT	ISSUED
C1900886	CO ISSUED	0	09/06/2019
B1900886	NEW CONSTR	213,670	02/01/2019

SALES DATA

OFF RECORD Number	DATE	TYPE INST	Q / U	V / I	RSN CD	SALE PRICE
2232/1330	10/24/2018	WD	Q	V	01	37,000
GRANTOR: MCFADDEN KYLE E						
GRANTEE: CORMIER DIANE C						
2084/0543	11/18/2016	WD	U	V	37	20,500
GRANTOR: FREEMAN KENNETH F						
GRANTEE: MCFADDEN KYLE E						

BUILDING NOTES

BUILDING DIMENSIONS

BAS=[YR=2019] W13 PTO=[YR=2019] N10 W10 S10 E10$ W50 S16 E10 FGR=[YR=2019] S23 E13 N18 E1 N5 W14$ E14 S5 W1 S9 E8 S2 FOP=[YR=2019] S4 E8 N4 W8$ E20 S2 E12 N34$.

EXTRA FEATURES

LN	OB/XF CODE	DESCRIPTION	BLD	CAP	L	W	UNITS	UT	Adj R	ADJ UNIT PRICE	ORIG COND	YEAR ON	YEAR ACTUAL	Q	% COND	OB/XF MKT VALUE	NOTES
1	0810	CONCRETE A	0	100	15	6	90.00	SF	6.50	6.50	100	2019	2019	3	99	579	
2	0812	CONCRETE C	0	100	0	0	1,526.00	SF	4.00	4.00	100	2019	2019	3	99	6,043	

LAND DESCRIPTION

TOTAL OB/XF 6,622

LN	USE CODE	CLS	LAND USE DESCRIPTION	CAP	RD	LOC ZONE	FRONT	DEPTH	TOT LND UTS	UNIT TYPE	DT	DPTH FACT	% COND	TOT ADJ	UNIT PRICE	ADJ UNIT PRICE	LAND VALUE	OTHER ADJUSTMENTS AND NOTES	YEAR	DENSITY	DECL	FRZ	YR	CONSRV
1	000100	C	SFR	100		RS-1	0.00	0.00	1.00	LT		1.00	1.00	0.95	100,000.00	95,000.00	95,000							

REVIEW DATE 05/25/2022 BY KWA Total Acres: 0.00 Total Land Value: 95,000 Market: 0 Agricultural: 0 Common: 95,000 PRINTED 08/02/2023 BY SYS