TRACT 9
IN OR 1372/1604
WILSON NECK ROAD #2 UNR

DILLHYON JAMES A & KRISTINA D
85782 WILSON NECK ROAD
YULEE, FL 32097-4779

2023

43-2N-27-4652-0009-0000

NASSAU COUNTY PROPERTY

BUILDING CHARACTERISTICS

ELEMENT	CD	CONSTRUCTION
Exterior Wall	05	AVERAGE 100
Roof Structur	03	GABLE/HIP 100
Roof Cover	03	COMP SHNGL 100
Interior Wall	05	DRYWALL 100
Interior Floo	13	LVT/LAMNT 60
Interior Floo	14	CARPET 40
Air Condition	03	CENTRAL 100
Heating Type	04	AIR DUCTED 100
Bedrooms		3 100
Bathrooms		2 100
Frame	02	WOOD FRAME 100
Stories	1.	1. 100
Units		0 100
Occupancy	00	NONE 100
Quality	03	Quality Level 03

DOR CODE 0100 SINGLE FAMILY
MAP NUM | MKT AREA 04
NEIGHBORHOOD/LOC 4048.00

AREA TYPE	TOTAL GROSS AREA	PCT OF BASE	TOT ADJ AREA	SUBAREA MARKET VALUE
BAS	1,761	100	1,761	155,273
FGR	462	55	254	22,396
FOP	92	30	28	2,469
FOP	110	30	33	2,910
FST	49	55	27	2,381
PTO	176	5	9	793
TOTALS	2,650		2,112	186,222

MARKET ADJUSTMENTS

TYPE	MDL	EFF. AREA	TOT ADJ PTS	EFF. BASE RATE	REPL. COST NEW	AYB	EYB	ECON	FNCT		NORM	% COND
0100	01	2,112	105.0560	94.81	200,239	2007	2007	0	0	0	7.00	93.00

1 SINGLE FAM – 100% - 2008 Heated Area: 1761 HX Base Yr 2008

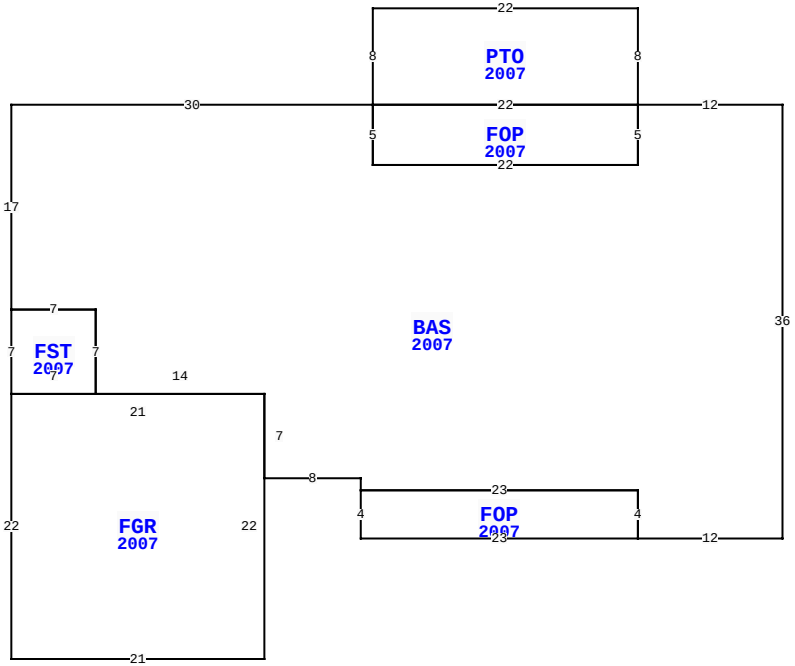

85782 WILSON NECK RD, YULEE

BLD DATE	11/14/2019	KKA	LGL DATE	
XF DATE	11/14/2019	KKA	LAND DATE	11/14/2019 KKA
INC DATE			AG DATE	

VALUATION SUMMARY

VALUATION BY		STANDARD
Tax Group: 4	Tax Dist:	
BUILDING MARKET VALUE		186,222
TOTAL MARKET OB/XF VALUE		4,379
TOTAL LAND VALUE - MARKET		80,000
TOTAL MARKET VALUE		270,601
SOH/AGL Deduction		135,398
ASSESSED VALUE		135,203
TOTAL EXEMPTION VALUE	HX HB	50,000
BASE TAXABLE VALUE		85,203
TOTAL JUST VALUE		270,601
NCON VALUE		0
INCOME VALUE		
PREVIOUS YEAR MKT VALUE		217,466

PERMIT NUM	DESCRIPTION	AMT	ISSUED
M11541	MECH OTHER	0	05/01/2006
R09330	REPAIR/RRF	6,200	05/01/2006
E17090	ELEC OTHER	0	04/01/2006
P10963	OTHER	0	04/01/2006
C17298	CO ISSUED	0	03/01/2006
B17298	NEW CONSTR	159,000	03/01/2006

SALES DATA

OFF RECORD Number	DATE	TYPE INST	Q / U	V / I	RSN CD	SALE PRICE
1372/1604	12/09/2005	WD	U	V		48,000
GRANTOR: EZELL INVESTMENT CO						
GRANTEE: DILLHYON JAMES A &						
0890/0388	7/07/1999	WD	Q	V		24,600
GRANTOR: HAMEL MAXIME F & THER						
GRANTEE: EZELL INVESTMENT CO						

BUILDING NOTES

BUILDING DIMENSIONS

BAS=[YR=2007] W12 PTO=[YR=2007] N8 W22 S8 E22$ FOP=[YR=2007] W22 S5 E22 N5$ S5 W22 N5 W30 S17FST=[YR=2007] S7 FGR=[YR=2007] S22 E21 N22 W21$ E7 N7 W7$ E7 S7 E14 S7 E8 S1 FOP=[YR=2007] S4 E23 N4 W23$ E23 S4 E12 N36$.

EXTRA FEATURES

LN	OB/XF CODE	DESCRIPTION	BLD	CAP	L	W	UNITS	UT	Adj R	ADJ UNIT PRICE	ORIG COND	YEAR ON	YEAR ACTUAL	Q	% COND	OB/XF MKT VALUE	NOTES
1	0810	CONCRETE A	0	100	26	19	494.00	SF	6.50	6.50	100	2007	2007	3	89	2,858	
2	0810	CONCRETE A	0	100	0	0	263.00	SF	6.50	6.50	100	2007	2007	3	89	1,521	

LAND DESCRIPTION

TOTAL OB/XF 4,379

LN	USE CODE	CLS	LAND USE DESCRIPTION	CAP	RD	LOC ZONE	FRONT	DEPTH	TOT LND UTS	UNIT TYPE	DT	DPTH FACT	% COND	TOT ADJ	UNIT PRICE	ADJ UNIT PRICE	LAND VALUE	OTHER ADJUSTMENTS AND NOTES	YEAR	DENSITY	DECL	FRZ	YR	CONSRV
1	000100	C	SFR	100		OR	0.00	0.00	1.00	LT		1.00	1.00	1.00	80,000.00	80,000.00	80,000							

REVIEW DATE 11/14/2019 BY KKA Total Acres: 0.00 Total Land Value: 80,000 Market: 0 Agricultural: 0 Common: 80,000 PRINTED 08/02/2023 BY SYS