LOT 7
IN OR 241/106
WILSON NECK PROPERTIES

DUPREE DREW M & MARILYN G
85131 BLACKMON RD
YULEE, FL 32097

2023

43-2N-27-4645-0007-0000

NASSAU COUNTY PROPERTY

BUILDING CHARACTERISTICS

ELEMENT	CD	CONSTRUCTION
Exterior Wall	15	CONC BLOCK 100
Roof Structur	03	GABLE/HIP 100
Roof Cover	03	COMP SHNGL 100
Interior Wall	05	DRYWALL 100
Interior Floo	14	CARPET 100
Air Condition	03	CENTRAL 100
Heating Type	04	AIR DUCTED 100
Bedrooms		3 100
Bathrooms		2 100
Frame	02	WOOD FRAME 100
Stories	1.	1. 100
Units		0 100
BUD8 Adjustme	04	DIST 01 100
Occupancy	00	NONE 100
Quality	03	Quality Level 03

DOR CODE 0100 SINGLE FAMILY
MAP NUM | MKT AREA 04
NEIGHBORHOOD/LOC 4048.00

AREA TYPE	TOTAL GROSS AREA	PCT OF BASE	TOT ADJ AREA	SUBAREA MARKET VALUE
BAS	1,772	100	1,772	120,246
FOP	56	30	17	1,154
UCP	440	20	88	5,971
USP	200	30	60	4,072
TOTALS	2,468		1,937	131,443

MARKET ADJUSTMENTS

TYPE	MDL	EFF. AREA	TOT ADJ PTS	EFF. BASE RATE	REPL. COST NEW	AYB	EYB	ECON	FNCT		NORM	% COND
0100	01	1,937	97.0200	87.56	169,604	1977	1977	0	0	0	22.50	77.50

1 SINGLE FAM – 100% - 0 Heated Area: 1772 HX Base Yr

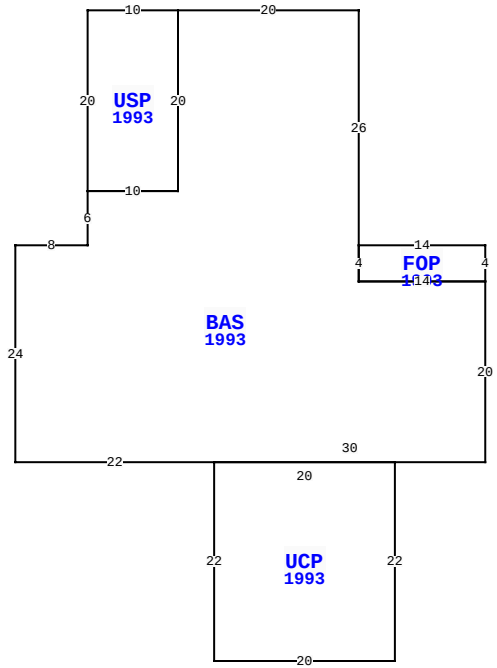

85131 BLACKMON RD, YULEE

BLD DATE		LGL DATE	
XF DATE		LAND DATE	
INC DATE		AG DATE	

NASSAU COUNTY PROPERTY — VALUATION SUMMARY

VALUATION BY		STANDARD
Tax Group: 4	Tax Dist:	
BUILDING MARKET VALUE		137,954
TOTAL MARKET OB/XF VALUE		1,773
TOTAL LAND VALUE - MARKET		80,000
TOTAL MARKET VALUE		219,727
SOH/AGL Deduction		108,778
ASSESSED VALUE		110,949
TOTAL EXEMPTION VALUE	HX HB	50,000
BASE TAXABLE VALUE		60,949
TOTAL JUST VALUE		219,727
NCON VALUE		0
INCOME VALUE		
PREVIOUS YEAR MKT VALUE		177,222

PERMIT NUM	DESCRIPTION	AMT	ISSUED
R98-0982	REPAIR/RRF	0	06/01/1998

SALES DATA

OFF RECORD Number	DATE	TYPE INST	Q U	V I	RSN CD	SALE PRICE
0241/0106	6/01/1977	WD	U	V		7,100

GRANTOR:
GRANTEE:

BUILDING NOTES

BUILDING DIMENSIONS

FOP=[YR=1993] W14 BAS=[YR=1993] N26 W20 USP=[YR=1993] W10 S20 E10 N20$ S20 W10 S6 W8 S24 E22 UCP=[YR=1993] S22 E20 N22 W20$ E30 N20 W14 N4$ S4 E14 N4$.

EXTRA FEATURES

LN	OB/XF CODE	DESCRIPTION	BLD	CAP	L	W	UNITS	UT	Adj R	ADJ UNIT PRICE	ORIG COND	YEAR ON	YEAR ACTUAL	Q	% COND	OB/XF MKT VALUE	NOTES
1	0810	CONCRETE A	0	100	20	22	440.00	SF	6.50	6.50	100	1990	1990	3	62	1,773	

LAND DESCRIPTION

TOTAL OB/XF 1,773

LN	USE CODE	CLS	LAND USE DESCRIPTION	CAP	RD	LOC ZONE	FRONT	DEPTH	TOT LND UTS	UNIT TYPE	DT	DPTH FACT	% COND	TOT ADJ	UNIT PRICE	ADJ UNIT PRICE	LAND VALUE	OTHER ADJUSTMENTS AND NOTES	YEAR	DENSITY	DECL	FRZ	YR	CONSRV
1	000110	C	SFR RURAL	100		OR	0.00	0.00	1.00	LT		1.00	1.00	1.00	80,000.00	80,000.00	80,000							

REVIEW DATE 07/24/2018 BY SBX Total Acres: 0.00 Total Land Value: 80,000 Market: 0 Agricultural: 0 Common: 80,000 PRINTED 08/02/2023 BY SYS

LOT 7
IN OR 241/106
WILSON NECK PROPERTIES

DUPREE DREW M & MARILYN G
85131 BLACKMON RD
YULEE, FL 32097

2023

43-2N-27-4645-0007-0000

NASSAU COUNTY PROPERTY

BUILDING CHARACTERISTICS

ELEMENT	CD	CONSTRUCTION
Exterior Wall	15	CONC BLOCK 100
Roof Structur	03	GABLE/HIP 100
Roof Cover	03	COMP SHNGL 100
Interior Wall	01	MINIMUM 100
Interior Floo	03	CONC FINSH 100
Air Condition	01	NONE 100
Heating Type	01	NONE 100
Bedrooms		0 100
Bathrooms		0 100
Frame	02	WOOD FRAME 100
Stories	1.	1. 100
Units		0 100
BUD8 Adjustme	04	DIST 01 100
Occupancy	00	NONE 100
Quality	03	Quality Level 03

DOR CODE 0100 SINGLE FAMILY
MAP NUM | MKT AREA 04
NEIGHBORHOOD/LOC 4048.00

AREA TYPE	TOTAL GROSS AREA	PCT OF BASE	TOT ADJ AREA	SUBAREA MARKET VALUE
BAS	624	100	624	5,897
UCP	324	20	65	615
TOTALS	948		689	6,511

MARKET ADJUSTMENTS

TYPE	MDL	EFF. AREA	TOT ADJ PTS	EFF. BASE RATE	REPL. COST NEW	AYB	EYB	ECON	FNCT		NORM	% COND
6500	01	689	54.0000	18.90	13,022	1985	1985	0	0	0	50.00	50.00

2 GARAGE RES – 100% - 0 Heated Area: 624 HX Base Yr

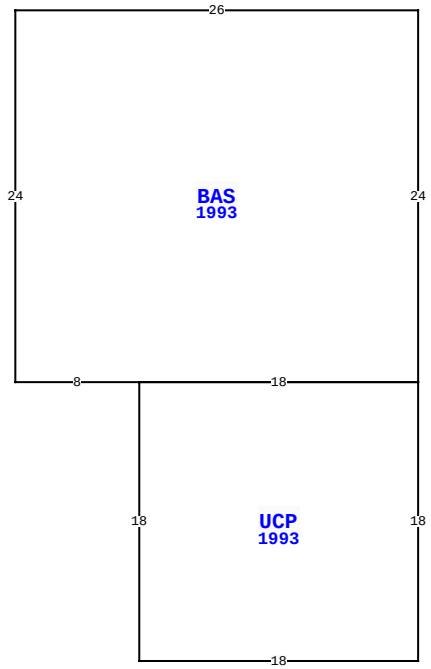

85131 BLACKMON RD, YULEE

BLD DATE		LGL DATE	
XF DATE		LAND DATE	
INC DATE		AG DATE	

VALUATION SUMMARY

VALUATION BY		STANDARD
Tax Group: 4	Tax Dist:	
BUILDING MARKET VALUE		137,954
TOTAL MARKET OB/XF VALUE		1,773
TOTAL LAND VALUE - MARKET		80,000
TOTAL MARKET VALUE		219,727
SOH/AGL Deduction		108,778
ASSESSED VALUE		110,949
TOTAL EXEMPTION VALUE	HX HB	50,000
BASE TAXABLE VALUE		60,949
TOTAL JUST VALUE		219,727
NCON VALUE		0
INCOME VALUE		
PREVIOUS YEAR MKT VALUE		177,222

PERMIT NUM	DESCRIPTION	AMT	ISSUED

SALES DATA

OFF RECORD Number	DATE	TYPE INST	Q U	V I	RSN CD	SALE PRICE
0241/0106	6/01/1977	WD	U	V		7,100

GRANTOR:
GRANTEE:

BUILDING NOTES

BUILDING DIMENSIONS

BAS=[YR=1993] W26 S24 E8 UCP=[YR=1993] S18 E18 N18 W18$ E18 N24$.

EXTRA FEATURES

LN	OB/XF CODE	DESCRIPTION	BLD	CAP	L	W	UNITS	UT	Adj R	ADJ UNIT PRICE	ORIG COND	YEAR ON	YEAR ACTUAL	Q	% COND	OB/XF MKT VALUE	NOTES

LAND DESCRIPTION

TOTAL OB/XF 0

LN	USE CODE	CLS	LAND USE DESCRIPTION	CAP	RD	LOC ZONE	FRONT	DEPTH	TOT LND UTS	UNIT TYPE	DT	DPTH FACT	% COND	TOT ADJ	UNIT PRICE	ADJ UNIT PRICE	LAND VALUE	OTHER ADJUSTMENTS AND NOTES	YEAR	DENSITY	DECL	FRZ	YR	CONSRV

REVIEW DATE 07/24/2018 BY SBX Total Acres: 0.00 Total Land Value: 80,000 Market: 0 Agricultural: 0 Common: 80,000 PRINTED 08/02/2023 BY SYS