BLOCK 1 LOT 13
WILSON NECK UNIT 2 PB 5/98-101

BOWLING CORY S & ASHLEY M
85793 AVANT RD
YULEE, FL 32097

2023

43-2N-27-4641-0001-0130

BUILDING CHARACTERISTICS

ELEMENT	CD	CONSTRUCTION
Exterior Wall	10	ABOVE AVG 100
Roof Structur	08	IRREGULAR 100
Roof Cover	03	COMP SHNGL 100
Interior Wall	05	DRYWALL 100
Interior Floo	12	HARDWOOD 80
Interior Floo	11	CLAY TILE 20
Air Condition	03	CENTRAL 100
Heating Type	04	AIR DUCTED 100
Bedrooms		4 100
Bathrooms		2 100
Frame	02	WOOD FRAME 100
Stories	2.	2. 100
Units		0 100
Occupancy	00	NONE 100
Quality	04	Quality Level 04
DOR CODE	0100	SINGLE FAMILY
MAP NUM		MKT AREA 04
NEIGHBORHOOD/LOC	4082.00	

AREA TYPE	TOTAL GROSS AREA	PCT OF BASE	TOT ADJ AREA	SUBAREA MARKET VALUE
BAS	2,089	100	2,089	185,561
FGR	552	55	304	27,004
FOP	119	30	36	3,198
FOP	204	30	61	5,419
FUS	409	100	409	36,330
FUS	639	100	639	56,761
TOTALS	4,012		3,538	314,272

MARKET ADJUSTMENTS

TYPE	MDL	EFF. AREA	TOT ADJ PTS	EFF. BASE RATE	REPL. COST NEW	AYB	EYB	ECON	FNCT		NORM	% COND
0100	01	3,538	106.4070	96.03	339,754	2006	2006	0	0	0	7.50	92.50

1 SINGLE FAM – 100% - 2020 Heated Area: 3137 HX Base Yr 2020

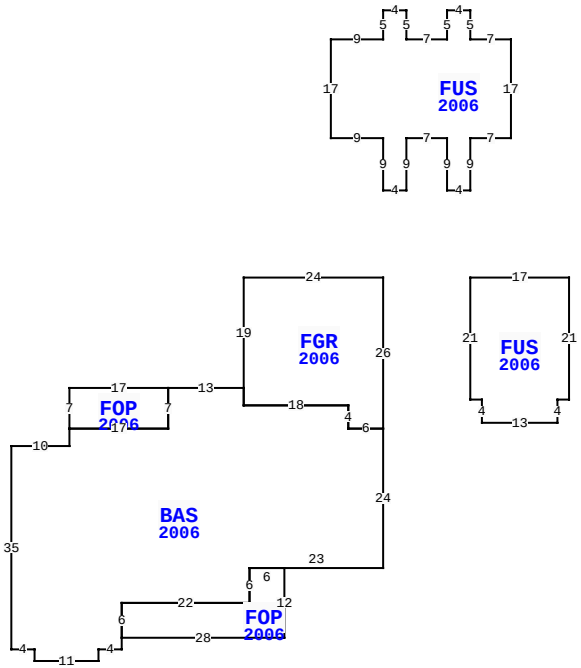

85793 AVANT RD, YULEE

BLD DATE		LGL DATE	
XF DATE		LAND DATE	
INC DATE		AG DATE	

NASSAU COUNTY PROPERTY

PAGE 1 of 2 4

VALUATION SUMMARY

VALUATION BY		STANDARD
Tax Group: 4	Tax Dist:	
BUILDING MARKET VALUE		337,180
TOTAL MARKET OB/XF VALUE		12,545
TOTAL LAND VALUE - MARKET		80,000
TOTAL MARKET VALUE		429,725
SOH/AGL Deduction		123,398
ASSESSED VALUE		306,327
TOTAL EXEMPTION VALUE	HX HB	50,000
BASE TAXABLE VALUE		256,327
TOTAL JUST VALUE		429,725
NCON VALUE		0
INCOME VALUE		
PREVIOUS YEAR MKT VALUE		352,295

PERMIT NUM	DESCRIPTION	AMT	ISSUED
20001542	1200 SF GAR	57,960	04/22/2020
M10920	MECH OTHER	0	01/01/2006
E15280	ELEC OTHER	2,000	07/01/2005
C15311	CO ISSUED	241,156	06/01/2005
R0507691	REPAIR/RRF	7,000	06/01/2005
P0509593	OTHER	0	06/01/2005

SALES DATA

OFF RECORD Number	DATE	TYPE INST	Q / U	V / I	RSN CD	SALE PRICE
2315/0167	10/25/2019	WD	Q	I	01	318,000
GRANTOR: MODINGER ERIC & LAURA						
GRANTEE: BOWLING CORY S & AS						
1947/0333	10/30/2014	WD	Q	I	01	279,000
GRANTOR: OWENS ROBERT L & THER						
GRANTEE: MODINGER ERIC & LAU						

BUILDING NOTES

BUILDING DIMENSIONS

FGR=[YR=2006] W24 S19 BAS=[YR=2006] W13 FOP=[YR=2006] W17 S7 E17 N7$ S7 W17 S3 W10 S35 E4 S2 E11 N2 E4 N2 FOP=[YR=2006] E28 N12 W6 S6 W22 S6$ N6 E22 N6 E23 N24 W6 N4 W18 N3 $ S3 E18 S4 E6 N26$ PTR=N15 FUS=[YR=2006] N9 W9 N17 E9 N5 E4 S5 E7 N5 E4 S5 E7 S17 W7 S9 W4 N9 W7 S9 W4$ S15$ PTR=E15 FUS=[YR=2006] E17 S21 W2 S4 W13 N4 W2 N21$ W15$.

EXTRA FEATURES

LN	OB/XF CODE	DESCRIPTION	BLD	CAP	L	W	UNITS	UT	Adj R	ADJ UNIT PRICE	ORIG COND	YEAR ON	YEAR ACTUAL	Q	% COND	OB/XF MKT VALUE	NOTES
1	0350	CARPORT WD	0	100	28	26	728.00	SF	1.95	1.95	100	1987	1987	3	20	284	
2	0681	POLE SHED	0	100	28	10	280.00	SF	15.00	15.00	100	1988	1988	3	20	840	
5	0812	CONCRETE C	0	100	0	0	2,094.00	SF	4.00	4.00	100	2006	2006	3	88	7,371	
6	0825	BRICK	0	100	0	0	181.00	SF	12.50	12.50	100	2006	2006	3	97	2,195	
7	0825	BRICK	0	100	0	0	153.00	SF	12.50	12.50	100	2006	2006	3	97	1,855	

LAND DESCRIPTION

TOTAL OB/XF 12,545

LN	USE CODE	CLS	LAND USE DESCRIPTION	CAP	RD	LOC ZONE	FRONT	DEPTH	TOT LND UTS	UNIT TYPE	DT	DPTH FACT	% COND	TOT ADJ	UNIT PRICE	ADJ UNIT PRICE	LAND VALUE	OTHER ADJUSTMENTS AND NOTES	YEAR	DENSITY	DECL	FRZ	YR	CONSRV
1	000100	C	SFR	100	0006	RS-1	0.00	0.00	1.00	LT		1.00	1.00	1.00	80,000.00	80,000.00	80,000							

REVIEW DATE 10/19/2020 BY NW Total Acres: 0.00 Total Land Value: 80,000 Market: 0 Agricultural: 0 Common: 80,000 PRINTED 08/02/2023 BY SYS

BLOCK 1 LOT 13
WILSON NECK UNIT 2 PB 5/98-101

BOWLING CORY S & ASHLEY M
85793 AVANT RD
YULEE, FL 32097

2023

43-2N-27-4641-0001-0130

BUILDING CHARACTERISTICS

ELEMENT	CD	CONSTRUCTION
Exterior Wall	25	MOD METAL 100
Roof Structur	10	STEEL FRME 100
Roof Cover	12	MODULAR MT 100
Interior Wall	07	NONE 100
Interior Floo	03	CONC FINSH 100
Air Condition	01	NONE 100
Heating Type	01	NONE 100
Bedrooms		0 100
Bathrooms		0 100
Frame	05	STEEL 100
Stories	1.	1. 100
Units		0 100
Occupancy	00	NONE 100

Quality	04	Quality Level 04
DOR CODE	0100	SINGLE FAMILY
MAP NUM		MKT AREA 04
NEIGHBORHOOD/LOC	4082.00	

AREA TYPE	TOTAL GROSS AREA	PCT OF BASE	TOT ADJ AREA	SUBAREA MARKET VALUE
BAS	1,200	100	1,200	22,908
TOTALS	1,200		1,200	22,908

MARKET ADJUSTMENTS

TYPE	MDL	EFF. AREA	TOT ADJ PTS	EFF. BASE RATE	REPL. COST NEW	AYB	EYB	ECON	FNCT		NORM	% COND
6500	01	1,200	55.6500	19.48	23,376	2002	2020	0	0	0	2.00	98.00

2 GARAGE RES – 100% - 2020 Heated Area: 1200 HX Base Yr 2020

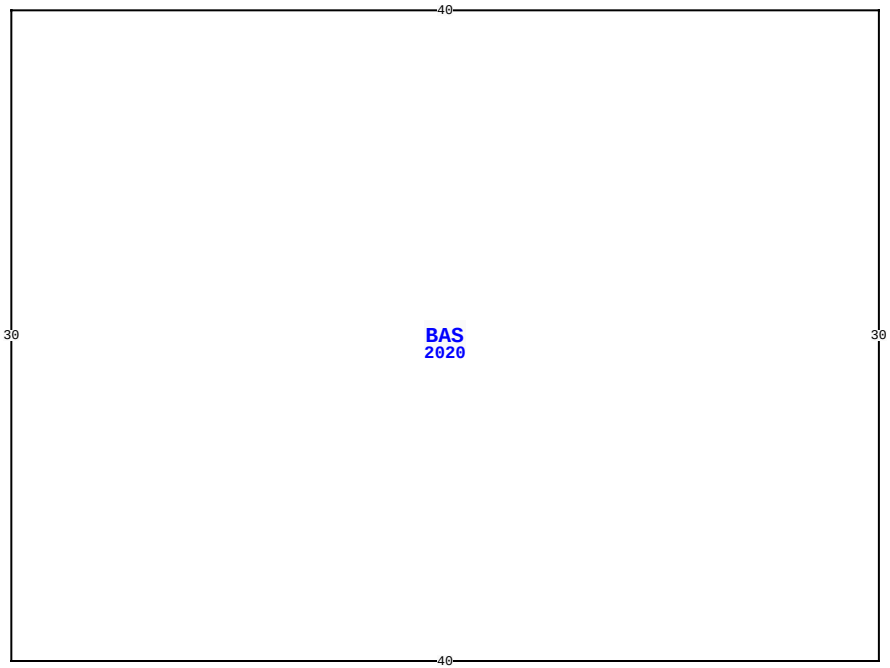

85793 AVANT RD, YULEE

BLD DATE		LGL DATE	
XF DATE		LAND DATE	
INC DATE		AG DATE	

NASSAU COUNTY PROPERTY

PAGE 2 of 2 4

VALUATION SUMMARY

VALUATION BY		STANDARD
Tax Group: 4	Tax Dist:	
BUILDING MARKET VALUE		337,180
TOTAL MARKET OB/XF VALUE		12,545
TOTAL LAND VALUE - MARKET		80,000
TOTAL MARKET VALUE		429,725
SOH/AGL Deduction		123,398
ASSESSED VALUE		306,327
TOTAL EXEMPTION VALUE	HX HB	50,000
BASE TAXABLE VALUE		256,327
TOTAL JUST VALUE		429,725
NCON VALUE		0
INCOME VALUE		
PREVIOUS YEAR MKT VALUE		352,295

PERMIT NUM	DESCRIPTION	AMT	ISSUED
B0515311	NEW CONSTR	241,156	06/01/2005
3677	XFOB	2,100	10/24/1986
3813	CHNGE SRVC	100	10/24/1986

SALES DATA

OFF RECORD Number	DATE	TYPE INST	Q / U	V / I	RSN CD	SALE PRICE
2315/0167	10/25/2019	WD	Q	I	01	318,000
GRANTOR: MODINGER ERIC & LAURA						
GRANTEE: BOWLING CORY S & AS						
1947/0333	10/30/2014	WD	Q	I	01	279,000
GRANTOR: OWENS ROBERT L & THER						
GRANTEE: MODINGER ERIC & LAU						

BUILDING NOTES

BUILDING DIMENSIONS

BAS=[YR=2020] W40 S30 E40 N30$.

EXTRA FEATURES

LN	OB/XF CODE	DESCRIPTION	BLD	CAP	L	W	UNITS	UT	Adj R	ADJ UNIT PRICE	ORIG COND	YEAR ON	YEAR ACTUAL	Q	% COND	OB/XF MKT VALUE	NOTES

LAND DESCRIPTION

TOTAL OB/XF 0

LN	USE CODE	CLS	LAND USE DESCRIPTION	CAP	RD	LOC ZONE	FRONT	DEPTH	TOT LND UTS	UNIT TYPE	DT	DPTH FACT	% COND	TOT ADJ	UNIT PRICE	ADJ UNIT PRICE	LAND VALUE	OTHER ADJUSTMENTS AND NOTES	YEAR	DENSITY	DECL	FRZ	YR	CONSRV

REVIEW DATE 10/19/2020 BY NW Total Acres: 0.00 Total Land Value: 80,000 Market: 0 Agricultural: 0 Common: 80,000 PRINTED 08/02/2023 BY SYS