BLOCK 1 LOT 34
IN OR 551 PG 818
LOFTON BLUFF 2 PB 4/92 & 93

MORRISON GARY W & PAULA F
PO BOX 766
YULEE, FL 32041-0766

2023

43-2N-27-4621-0001-0340

NASSAU COUNTY PROPERTY

BUILDING CHARACTERISTICS

ELEMENT	CD	CONSTRUCTION
Exterior Wall	05	AVERAGE 80
Exterior Wall	12	CEDAR 20
Roof Structur	08	IRREGULAR 100
Roof Cover	12	MODULAR MT 100
Interior Wall	05	DRYWALL 100
Interior Floo	14	CARPET 80
Interior Floo	08	SHT VINYL 20
Air Condition	03	CENTRAL 100
Heating Type	04	AIR DUCTED 100
Bedrooms		2 100
Bathrooms		2 100
Frame	02	WOOD FRAME 100
Stories	2.	2. 100
Units		0 100
BUD8 Adjustme	04	DIST 01 100
Occupancy	00	NONE 100
Quality	03	Quality Level 03

DOR CODE	0100	SINGLE FAMILY	
MAP NUM		MKT AREA	04
NEIGHBORHOOD/LOC	4048.00		

AREA TYPE	TOTAL GROSS AREA	PCT OF BASE	TOT ADJ AREA	SUBAREA MARKET VALUE
BAS	1,568	100	1,568	122,334
FOP	40	30	12	937
FSP	288	40	115	8,972
FUS	840	100	840	65,536
TOTALS	2,736		2,535	197,779

MARKET ADJUSTMENTS

TYPE	MDL	EFF. AREA	TOT ADJ PTS	EFF. BASE RATE	REPL. COST NEW	AYB	EYB	ECON	FNCT		NORM	% COND
0100	01	2,535	102.9120	92.88	235,451	1988	1988	0	0	0	16.00	84.00

1 SINGLE FAM – 100% - 0 Heated Area: 2408 HX Base Yr

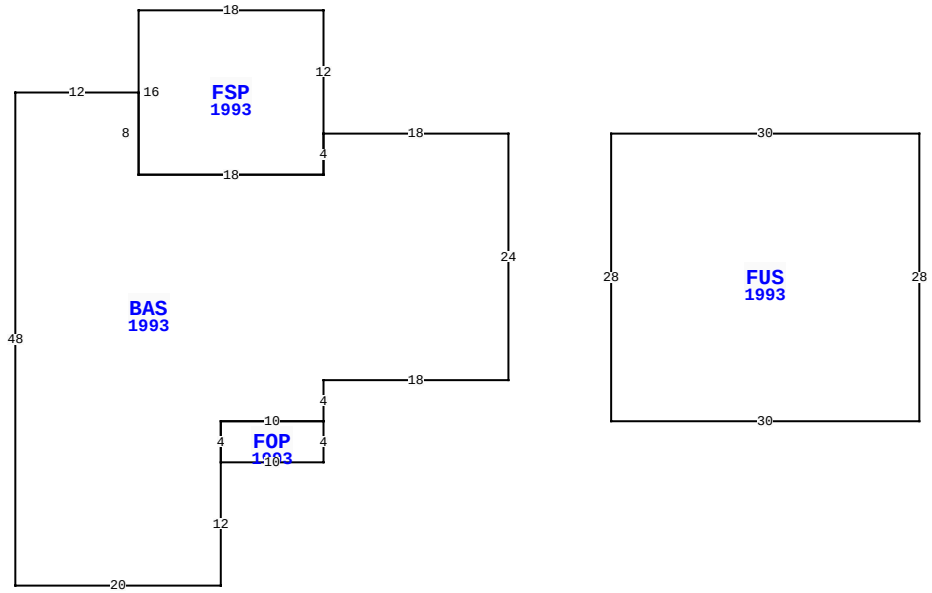

85136 AMANDA CT, YULEE

BLD DATE		LGL DATE	
XF DATE		LAND DATE	
INC DATE		AG DATE	

VALUATION SUMMARY

VALUATION BY		STANDARD
Tax Group: 4	Tax Dist:	
BUILDING MARKET VALUE		197,779
TOTAL MARKET OB/XF VALUE		11,737
TOTAL LAND VALUE - MARKET		116,000
TOTAL MARKET VALUE		325,516
SOH/AGL Deduction		156,161
ASSESSED VALUE		169,355
TOTAL EXEMPTION VALUE	HX HB	50,000
BASE TAXABLE VALUE		119,355
TOTAL JUST VALUE		325,516
NCON VALUE		0
INCOME VALUE		
PREVIOUS YEAR MKT VALUE		286,904

PERMIT NUM	DESCRIPTION	AMT	ISSUED
94-00942	SWIM POOL	7,800	04/01/1994
5515	NEW CONSTR	1,950	11/16/1988
2816	H/AC	3,200	11/16/1988
3243	NEW CONSTR	0	10/12/1988
5196	NEW CONSTR	55,585	09/30/1988

SALES DATA

OFF RECORD Number	DATE	TYPE INST	Q / U	V / I	RSN CD	SALE PRICE
0551/0818	9/02/1988	WD	Q	V		16,500
GRANTOR: PLUNK MORRIS A						
GRANTEE: MORRISON GARY W						
0389/0230	6/01/1983	MS	U	V		37,700
GRANTOR:						
GRANTEE:						

BUILDING NOTES

BUILDING DIMENSIONS

BAS=[YR=1993] W18 FSP=[YR=1993] N12 W18 S16 E18 N4$ S4 W18 N8 W12 S48 E20 N12 FOP=[YR=1993] E10 N4 W10 S4$ N4 E10 N4 E18 N24$ PTR=E10 FUS=[YR=1993] E30 S28 W30 N28$ W10$.

EXTRA FEATURES

LN	OB/XF CODE	DESCRIPTION	BLD	CAP	L	W	UNITS	UT	Adj R	ADJ UNIT PRICE	ORIG COND	YEAR ON	YEAR ACTUAL	Q	% COND	OB/XF MKT VALUE	NOTES
1	0500	FP-PRE FAB	0	100	0	0	1.00	UT	3,500.00	3,500.00	100	1988	1988	3	66	2,310	
2	0940	SHEDS/PORT	0	100	8	10	80.00	SF	20.10	20.10	100	1993	1993	3	20	322	
3	0940	SHEDS/PORT	0	100	10	16	160.00	SF	20.10	20.10	100	1994	1994	3	20	643	
4	0845	KOOL DECK	0	100	80	5	400.00	SF	7.25	7.25	100	1994	1994	3	70	2,030	
5	0861	POOL GUNIT	0	100	14	24	336.00	SF	85.00	85.00	100	1994	1994	3	20	5,712	
6	0752	USP	0	100	16	12	192.00	SF	15.00	15.00	100	1996	1996	3	25	720	

LAND DESCRIPTION

TOTAL OB/XF 11,737

LN	USE CODE	CLS	LAND USE DESCRIPTION	CAP	RD	LOC ZONE	FRONT	DEPTH	TOT LND UTS	UNIT TYPE	DT	DPTH FACT	% COND	TOT ADJ	UNIT PRICE	ADJ UNIT PRICE	LAND VALUE	OTHER ADJUSTMENTS AND NOTES	YEAR	DENSITY	DECL	FRZ	YR	CONSRV
1	000116	C	SFR MARSH	100		OR	0.00	0.00	1.16	AC		1.00	1.00	1.00	100,000.00	100,000.00	116,000							

REVIEW DATE 08/23/2018 BY SBX Total Acres: 1.16 Total Land Value: 116,000 Market: 0 Agricultural: 0 Common: 116,000 PRINTED 08/02/2023 BY SYS