BLOCK 1 LOT 6
IN OR 1440/1438
EX FPL ESMT OR 383/123

RESCHKE BRUCE A
85764 BLACKMON RD
YULEE, FL 32097

2023

43-2N-27-4621-0001-0060

NASSAU COUNTY PROPERTY

BUILDING CHARACTERISTICS

ELEMENT	CD	CONSTRUCTION
Exterior Wall	10	ABOVE AVG 100
Roof Structur	03	GABLE/HIP 100
Roof Cover	03	COMP SHNGL 100
Interior Wall	05	DRYWALL 100
Interior Floo	08	SHT VINYL 50
Interior Floo	14	CARPET 50
Air Condition	03	CENTRAL 100
Heating Type	04	AIR DUCTED 100
Bedrooms		2 100
Bathrooms		2 100
Frame	02	WOOD FRAME 100
Stories	2.	2. 100
Units		0 100
BUD8 Adjustme	04	DIST 01 100
Occupancy	00	NONE 100
Quality	04	Quality Level 04
DOR CODE	0100	SINGLE FAMILY
MAP NUM		MKT AREA 04
NEIGHBORHOOD/LOC	4048.00	

AREA TYPE	TOTAL GROSS AREA	PCT OF BASE	TOT ADJ AREA	SUBAREA MARKET VALUE
BAS	1,168	100	1,168	101,414
FSP	240	40	96	8,335
FSP	288	40	115	9,985
FUS	432	100	432	37,510
UGR	602	45	271	23,531
UOP	240	20	48	4,168
TOTALS	2,970		2,130	184,943

MARKET ADJUSTMENTS

TYPE	MDL	EFF. AREA	TOT ADJ PTS	EFF. BASE RATE	REPL. COST NEW	AYB	EYB	ECON	FNCT		NORM	% COND
0100	01	2,130	113.1900	102.15	217,580	1984	1990	0	0	0	15.00	85.00

1 SINGLE FAM – 100% - 2007 Heated Area: 1600 HX Base Yr 2007

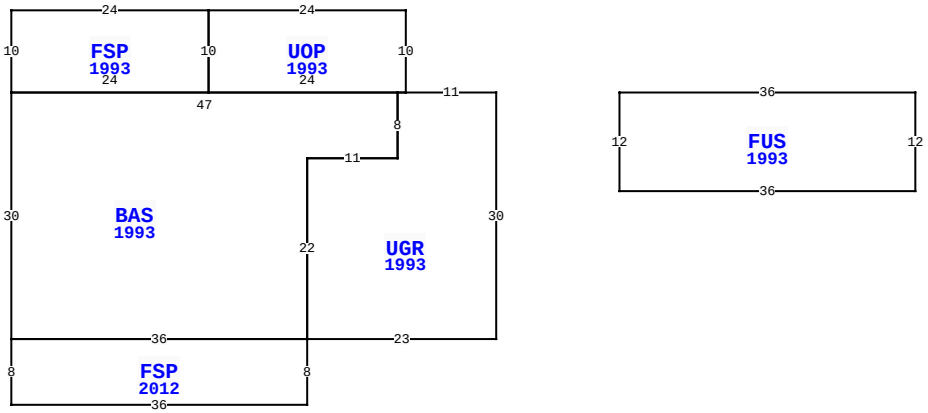

85764 BLACKMON RD, YULEE

BLD DATE		LGL DATE	
XF DATE		LAND DATE	
INC DATE		AG DATE	

NASSAU COUNTY PROPERTY — VALUATION SUMMARY

VALUATION BY		STANDARD
Tax Group: 4	Tax Dist:	
BUILDING MARKET VALUE		184,943
TOTAL MARKET OB/XF VALUE		23,799
TOTAL LAND VALUE - MARKET		125,000
TOTAL MARKET VALUE		333,742
SOH/AGL Deduction		34,505
ASSESSED VALUE		299,237
TOTAL EXEMPTION VALUE	HX HB	50,000
BASE TAXABLE VALUE		249,237
TOTAL JUST VALUE		333,742
NCON VALUE		0
INCOME VALUE		
PREVIOUS YEAR MKT VALUE		290,521

PERMIT NUM	DESCRIPTION	AMT	ISSUED
17007547	REPAIR/RRF	10,000	08/21/2017

SALES DATA

OFF RECORD Number	DATE	TYPE INST	Q U	V I	RSN CD	SALE PRICE
2268/0067	4/10/2019	QC	U	I	11	100
GRANTOR: RESCHKE POLLY K						
GRANTEE: RESCHKE BRUCE A						
2254/1157	1/01/2019	FJ	U	I	11	0
GRANTOR: CLERK OF COURT						
GRANTEE: RESCHKE BRUCE A						

BUILDING NOTES

BUILDING DIMENSIONS

UGR=[YR=1993] W11 UOP=[YR=1993] N10 W24 FSP=[YR=1993] W24 S10 BAS=[YR=1993] S30 FSP=[YR=2012] S8 E36 N8 W36$ E36 N22 E11 N8 W47$ E24 N10$ S10 E24$ W1 S8 W11 S22 E23 N30$ PTR=E15 FUS=[YR=1993] E36 S12 W36 N12$ W15$.

EXTRA FEATURES

LN	OB/XF CODE	DESCRIPTION	BLD	CAP	L	W	UNITS	UT	Adj R	ADJ UNIT PRICE	ORIG COND	YEAR ON	YEAR ACTUAL	Q	% COND	OB/XF MKT VALUE	NOTES
2	0500	FP-PRE FAB	0	100	0	0	1.00	UT	3,500.00	3,500.00	100	1984	1984	3	58	2,030	
3	0810	CONCRETE A	0	100	0	0	3,910.00	SF	6.50	6.50	100	1987	1987	3	54.5	13,851	
5	0681	POLE SHED	0	100	11	8	88.00	SF	15.00	15.00	100	1995	1995	3	24	317	
6	0300	BOAT DCK W	0	100	137	4	548.00	SF	40.00	40.00	100	1995	1995	3	24	5,261	
7	0940	SHEDS/PORT	0	100	8	5	40.00	SF	30.00	30.00	100	1984	1984	3	20	240	
8	0300	BOAT DCK W	0	100	20	10	200.00	SF	40.00	40.00	100	1995	1995	3	24	1,920	
9	1076	TRELLIS A	0	100	12	10	120.00	SF	7.50	7.50	100	1995	1995	3	20	180	

LAND DESCRIPTION

TOTAL OB/XF 23,799

LN	USE CODE	CLS	LAND USE DESCRIPTION	CAP	RD	LOC ZONE	FRONT	DEPTH	TOT LND UTS	UNIT TYPE	DT	DPTH FACT	% COND	TOT ADJ	UNIT PRICE	ADJ UNIT PRICE	LAND VALUE	OTHER ADJUSTMENTS AND NOTES	YEAR	DENSITY	DECL	FRZ	YR	CONSRV
1	000130	C	SFR WATER	100		OR	0.00	0.00	100.00	FF		1.00	1.00	1.00	1,250.00	1,250.00	125,000							

REVIEW DATE 08/27/2018 BY SBX Total Acres: 0.00 Total Land Value: 125,000 Market: 0 Agricultural: 0 Common: 125,000 PRINTED 08/02/2023 BY SYS