LOT 2
IN OR 1785/96
ESMT PT OR 1389/643

**EDWARDS DAVID A JR & HEATHER M**
97704 BLUFF VIEW CR
YULEE, FL 32097

**2023**

**42-3N-28-1870-0002-0000**

## NASSAU COUNTY PROPERTY



### BUILDING CHARACTERISTICS

| ELEMENT | CD | CONSTRUCTION |
|---|---|---|
| Exterior Wall | 31 | HARDIE BRD 70 |
| Exterior Wall | 16 | WD FR STUC 30 |
| Roof Structur | 03 | GABLE/HIP 100 |
| Roof Cover | 03 | COMP SHNGL 100 |
| Interior Wall | 05 | DRYWALL 100 |
| Interior Floo | 14 | CARPET 70 |
| Interior Floo | 11 | CLAY TILE 30 |
| Air Condition | 03 | CENTRAL 100 |
| Heating Type | 04 | AIR DUCTED 100 |
| Bedrooms | | 5 100 |
| Bathrooms | | 4 100 |
| Frame | 02 | WOOD FRAME 100 |
| Stories | 2. | 2. 100 |
| Units | | 0 100 |
| Occupancy | 00 | NONE 100 |
| Quality | 01 | Quality Level 01 |
| DOR CODE | 0100 | SINGLE FAMILY |
| MAP NUM | | MKT AREA 04 |
| NEIGHBORHOOD/LOC | 4063.00 | |

| AREA TYPE | TOTAL GROSS AREA | PCT OF BASE | TOT ADJ AREA | SUBAREA MARKET VALUE |
|---|---|---|---|---|
| BAS | 2,301 | 100 | 2,301 | 246,579 |
| FGR | 450 | 55 | 248 | 26,576 |
| FOP | 25 | 30 | 8 | 857 |
| FOP | 117 | 30 | 35 | 3,750 |
| FST | 70 | 55 | 38 | 4,072 |
| FUS | 399 | 100 | 399 | 42,757 |
| TOTALS | 3,362 | | 3,029 | 324,592 |

### MARKET ADJUSTMENTS

| TYPE | MDL | EFF. AREA | TOT ADJ PTS | EFF. BASE RATE | REPL. COST NEW | AYB | EYB | ECON | FNCT | | NORM | % COND |
|---|---|---|---|---|---|---|---|---|---|---|---|---|
| 0900 | 01 | 3,029 | 95.1372 | 112.98 | 342,216 | 2011 | 2011 | 0 | 0 | 0 | 5.15 | 94.85 |

1 SNGL FAM – 100% - 2018 Heated Area: 2700 HX Base Yr 2018

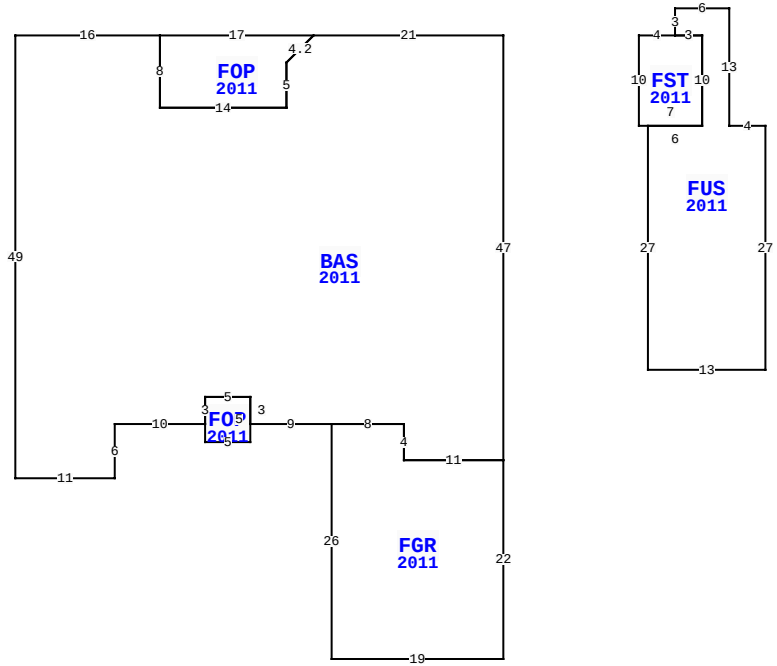


97704 BLUFF VIEW CIR, YULEE

| | | | |
|---|---|---|---|
| BLD DATE | 03/03/2023 NW | LGL DATE | |
| XF DATE | | LAND DATE | 06/15/2023 MLU |
| INC DATE | | AG DATE | |

### NASSAU COUNTY PROPERTY — VALUATION SUMMARY

| | | |
|---|---|---|
| VALUATION BY | | STANDARD |
| Tax Group: 4 | Tax Dist: | |
| BUILDING MARKET VALUE | | 324,592 |
| TOTAL MARKET OB/XF VALUE | | 5,566 |
| TOTAL LAND VALUE - MARKET | | 75,000 |
| TOTAL MARKET VALUE | | 405,158 |
| SOH/AGL Deduction | | 144,320 |
| ASSESSED VALUE | | 260,838 |
| TOTAL EXEMPTION VALUE | HX HB | 50,000 |
| BASE TAXABLE VALUE | | 210,838 |
| TOTAL JUST VALUE | | 405,158 |
| NCON VALUE | | 0 |
| INCOME VALUE | | |
| PREVIOUS YEAR MKT VALUE | | 329,197 |

| PERMIT NUM | DESCRIPTION | AMT | ISSUED |
|---|---|---|---|
| B24843 | CO ISSUED | 0 | 11/21/2011 |
| E23679 | NEW CONSTR | 0 | 08/01/2011 |
| M16482 | H/AC | 0 | 08/01/2011 |
| P14855 | NEW CONSTR | 0 | 06/01/2011 |
| B24843 | NEW CONSTR | 294,763 | 06/01/2011 |

### SALES DATA

| OFF RECORD Number | DATE | TYPE INST | Q U | V I | RSN CD | SALE PRICE |
|---|---|---|---|---|---|---|
| 1949/0413 | 11/04/2014 | QC | U | I | 11 | 100 |
| GRANTOR: DRH ENERGY INC | | | | | | |
| GRANTEE: EDWARDS DAVID A JR | | | | | | |
| 1785/0096 | 3/22/2012 | WD | Q | I | 02 | 214,000 |
| GRANTOR: D R HORTON INC-JACKSO | | | | | | |
| GRANTEE: EDWARDS DAVID A JR | | | | | | |

### BUILDING NOTES

### EXTRA FEATURES

| LN | OB/XF CODE | DESCRIPTION | BLD | CAP | L | W | UNITS | UT | Adj R | ADJ UNIT PRICE | ORIG COND | YEAR ON | YEAR ACTUAL | Q | % COND | OB/XF MKT VALUE | NOTES |
|---|---|---|---|---|---|---|---|---|---|---|---|---|---|---|---|---|---|
| 1 | 0812 | CONCRETE C | 0 | 100 | 0 | 0 | 1,462.00 | SF | 4.00 | 4.00 | 100 | 2011 | 2011 | 3 | 93 | 5,439 | |
| 2 | 0810 | CONCRETE A | 0 | 100 | 7 | 3 | 21.00 | SF | 6.50 | 6.50 | 100 | 2011 | 2011 | 3 | 93 | 127 | |

### BUILDING DIMENSIONS

BAS=[YR=2011] W21 FOP=[YR=2011] W17 S8 E14 N5 U3 R3 $ L3 D3 S5 W14 N8 W16 S49 E11 N6 E10 FOP=[YR=2011] S2 E5 N5 W5 S3$ N3 E5 S3 E9 FGR=[YR=2011] S26 E19 N22 W11 N4 W8 $ E8 S4 E11 N47$ PTR= E15 FST=[YR=2011] E4 FUS=[YR=2011] N3 E6 S13 E4 S27 W13 N27 E6 N10 W3$ E3 S10 W7 N10$ W15$.

### LAND DESCRIPTION

TOTAL OB/XF 5,566

| LN | USE CODE | CLS | LAND USE DESCRIPTION | CAP | RD | LOC ZONE | FRONT | DEPTH | TOT LND UTS | UNIT TYPE | DT | DPTH FACT | % COND | TOT ADJ | UNIT PRICE | ADJ UNIT PRICE | LAND VALUE | OTHER ADJUSTMENTS AND NOTES | YEAR | DENSITY | DECL | FRZ | YR | CONSRV |
|---|---|---|---|---|---|---|---|---|---|---|---|---|---|---|---|---|---|---|---|---|---|---|---|---|
| 1 | 000100 | C | SFR | 100 | 0003 | RS-1 | 0.00 | 0.00 | 1.00 | LT | | 1.00 | 1.00 | 1.00 | 75,000.00 | 75,000.00 | 75,000 | | | | | | | |

REVIEW DATE 02/03/2017 BY KW Total Acres: 0.00 Total Land Value: 75,000 Market: 0 Agricultural: 0 Common: 75,000 PRINTED 08/02/2023 BY SYS