IN OR 2409/315

SPENCER ASHLEY ALINE
97139 BELLEVILLE LN
YULEE, FL 32097

2023

42-3N-28-0000-0005-0010

BUILDING CHARACTERISTICS

ELEMENT	CD	CONSTRUCTION
Exterior Wall	10	ABOVE AVG 100
Roof Structur	08	IRREGULAR 100
Roof Cover	03	COMP SHNGL 100
Interior Wall	05	DRYWALL 100
Interior Floo	14	CARPET 60
Interior Floo	13	LVT/LAMNT 40
Air Condition	03	CENTRAL 100
Heating Type	04	AIR DUCTED 100
Bedrooms		3 100
Bathrooms		2.5 100
Frame	02	WOOD FRAME 100
Stories	1.5	1.5 100
Units		0 100
Occupancy	00	NONE 100
Quality	04	Quality Level 04
DOR CODE	0100	SINGLE FAMILY
MAP NUM		MKT AREA 04
NEIGHBORHOOD/LOC	4031.00	

AREA TYPE	TOTAL GROSS AREA	PCT OF BASE	TOT ADJ AREA	SUBAREA MARKET VALUE
BAL	36	15	5	631
BAL	136	15	20	2,523
BAL	170	15	26	3,280
BAS	1,432	100	1,432	180,668
FGR	1,716	55	944	119,100
FOP	72	30	22	2,776
FOP	78	30	23	2,902
FOP	170	30	51	6,434
FUS	555	100	555	70,022
STR	68	10	7	883
TOTALS	4,704		3,112	392,626

MARKET ADJUSTMENTS

TYPE	MDL	EFF. AREA	TOT ADJ PTS	EFF. BASE RATE	REPL. COST NEW	AYB	EYB	ECON	FNCT		NORM	% COND
0900	01	3,112	108.9648	129.40	402,693	2016	2016	0	0	0	2.50	97.50

2 SNGL FAM – 100% - 2017 Heated Area: 1987 HX Base Yr 2017

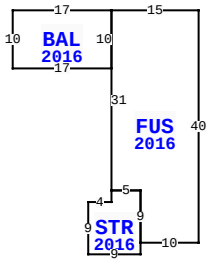

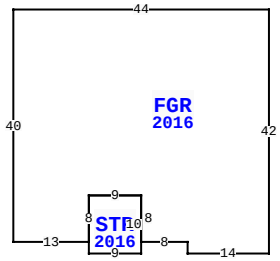

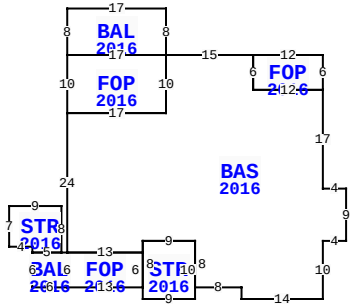

** This building has 13 Sub-Areas

97139 BELLEVILLE LN, YULEE

BLD DATE		LGL DATE	
XF DATE		LAND DATE	
INC DATE		AG DATE	

NASSAU COUNTY PROPERTY

PAGE 1 of 1 4

VALUATION SUMMARY

VALUATION BY		STANDARD
Tax Group: 4	Tax Dist:	
BUILDING MARKET VALUE		392,626
TOTAL MARKET OB/XF VALUE		6,441
TOTAL LAND VALUE - MARKET		560,640
TOTAL MARKET VALUE		959,707
SOH/AGL Deduction		374,380
ASSESSED VALUE		585,327
TOTAL EXEMPTION VALUE	HX HB	50,000
BASE TAXABLE VALUE		535,327
TOTAL JUST VALUE		959,707
NCON VALUE		0
INCOME VALUE		
PREVIOUS YEAR MKT VALUE		849,285

PERMIT NUM	DESCRIPTION	AMT	ISSUED
B1631915	CO ISSUED	0	11/22/2016
B1631915	NEW CONSTR	0	03/01/2016
94-1169	CHNGE SRVC	500	08/01/1994

SALES DATA

OFF RECORD Number	DATE	TYPE INST	Q U	V I	RSN CD	SALE PRICE
2409/0315	11/16/2020	QC	U	I	11	100
GRANTOR: SPENCER JEFFREY THOMA						
GRANTEE: SPENCER ASHLEY ALIN						
1847/0879	3/20/2013	WD	Q	I	02	105,000
GRANTOR: MERLINI JOSEPH C JR						
GRANTEE: SPENCER JEFFREY THO						

BUILDING NOTES

BUILDING DIMENSIONS

FGR=[YR=2016] W44 S40 E13 STR=[YR=2016] S2 E9 N10 W9 S8$ N8 E9 S8 E8 S2 E14 N42$ PTR= E30 BAL=[YR=2016] S8 FOP=[YR=2016] S10 BAS=[YR=2016] S24 BAL=[YR=2016] W1 STR=[YR=2016] N8 W9 S7 E4 S1 E5$ W5 S6 E6 N6$ FOP=[YR=2016] S6 E13 STR=[YR=2016] S2 E9 N10 W9 S8$ N6 W13$ E13 N2 E9 S8 E8 S2E14 N10 E4 N9 W4 N17 FOP=[YR=2016] N6 W12 S6 E12$ W12 N6 W15 S10 W17$ E17 N10 W17$ E17 N8 W17$ W30$ PTR= E30 N20 STR=[YR=2016] E9 N2 FUS=[YR=2016] E10 N40 W15 BAL=[YR=2016] W17 S10 E17 N10$ S31 E5 S9$ N9 W5 S2 W4 S9 $ S20 W30$.

EXTRA FEATURES

LN	OB/XF CODE	DESCRIPTION	BLD	CAP	L	W	UNITS	UT	Adj R	ADJ UNIT PRICE	ORIG COND	YEAR ON	YEAR ACTUAL	Q	% COND	OB/XF MKT VALUE	NOTES
4	0504	FP-ELECTRI	0	100	0	0	1.00	UT	2,000.00	2,000.00	100	2016	2016	3	98	1,960	
5	0812	CONCRETE C	0	100	0	0	1,155.00	SF	4.00	4.00	100	2017	2017	3	97	4,481	

LAND DESCRIPTION

TOTAL OB/XF 6,441

LN	USE CODE	CLS	LAND USE DESCRIPTION	CAP	RD	LOC ZONE	FRONT	DEPTH	TOT LND UTS	UNIT TYPE	DT	DPTH FACT	% COND	TOT ADJ	UNIT PRICE	ADJ UNIT PRICE	LAND VALUE	OTHER ADJUSTMENTS AND NOTES	YEAR	DENSITY	DECL	FRZ	YR	CONSRV
1	000116	C	SFR MARSH	100		RS-1	219.00	341.00	219.00	FF		1.00	1.00	0.80	3,200.00	2,560.00	560,640							

REVIEW DATE 07/09/2019 BY KW Total Acres: 0.00 Total Land Value: 560,640 Market: 0 Agricultural: 0 Common: 560,640 PRINTED 08/02/2023 BY SYS