LOT 80
VILLAGES OF WOODBRIDGE
PHASE IV B OR 2438/574

JENSEN GORDON L & EILEEN L/E/
94970 COLNAGO COURT
FERNANDINA BEACH, FL 32034

2023

42-2N-28-1141-0080-0000

NASSAU COUNTY PROPERTY

BUILDING CHARACTERISTICS

ELEMENT	CD	CONSTRUCTION
Exterior Wall	31	HARDIE BRD 100
Roof Structur	03	GABLE/HIP 100
Roof Cover	03	COMP SHNGL 100
Interior Wall	05	DRYWALL 100
Interior Floo	13	LVT/LAMNT 50
Interior Floo	14	CARPET 50
Air Condition	03	CENTRAL 100
Heating Type	04	AIR DUCTED 100
Bedrooms		3 100
Bathrooms		2 100
Frame	02	WOOD FRAME 100
Stories	1.	1. 100
Units		0 100
Occupancy	00	NONE 100
Quality	03	Quality Level 03
DOR CODE	0100	SINGLE FAMILY
MAP NUM		MKT AREA 04
NEIGHBORHOOD/LOC	4068.100	

AREA TYPE	TOTAL GROSS AREA	PCT OF BASE	TOT ADJ AREA	SUBAREA MARKET VALUE
BAS	1,601	100	1,601	157,170
FGR	581	55	320	31,414
FOP	48	30	14	1,374
FSP	160	40	64	6,283
TOTALS	2,390		1,999	196,242

MARKET ADJUSTMENTS

TYPE	MDL	EFF. AREA	TOT ADJ PTS	EFF. BASE RATE	REPL. COST NEW	AYB	EYB	ECON	FNCT		NORM	% COND
0100	01	1,999	108.7800	98.17	196,242	2022	2022	0	0	0	0.00	100.00

1 SINGLE FAM – 100% - 2023 Heated Area: 1601 HX Base Yr 2023

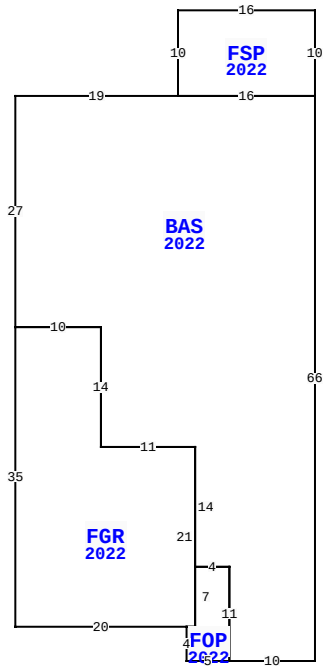

94970 COLNAGO CT, FERNANDINA BEACH

BLD DATE		LGL DATE	
XF DATE		LAND DATE	05/18/2023 MLU
INC DATE		AG DATE	

VALUATION SUMMARY

VALUATION BY		STANDARD
Tax Group: 4	Tax Dist:	
BUILDING MARKET VALUE		196,242
TOTAL MARKET OB/XF VALUE		3,411
TOTAL LAND VALUE - MARKET		75,000
TOTAL MARKET VALUE		274,653
SOH/AGL Deduction		0
ASSESSED VALUE		274,653
TOTAL EXEMPTION VALUE	HX HB VX	55,000
BASE TAXABLE VALUE		219,653
TOTAL JUST VALUE		274,653
NCON VALUE		199,653
INCOME VALUE		
PREVIOUS YEAR MKT VALUE		65,000

PERMIT NUM	DESCRIPTION	AMT	ISSUED
C2108654	CO ISSUED	0	06/30/2022
21008654	NEW CONSTR	244,576	09/01/2021

SALES DATA

OFF RECORD Number	DATE	TYPE INST	Q U	V I	RSN CD	SALE PRICE
2591/1651	9/20/2022	LE	U	I	11	100
GRANTOR: JENSEN GORDON LESTER						
GRANTEE: WALTON SUSAN RENEE						
2579/0549	6/30/2022	SW	Q	I	01	346,300
GRANTOR: RICHMOND AMERICAN HOM						
GRANTEE: JENSEN GORDON LESTE						

BUILDING NOTES

BUILDING DIMENSIONS

FSP=[YR=2022] W16 S10 BAS=[YR=2022] W19 S27 FGR=[YR=2022] S35 E20 FOP=[YR=2022] S4 E5 N11 W4 S7 W1$ E1 N21 W11 N14 W10$ E10 S14 E11 S14 E4 S11 E10 N66 W16$ E16 N10$.

EXTRA FEATURES

LN	OB/XF CODE	DESCRIPTION	BLD	CAP	L	W	UNITS	UT	Adj R	ADJ UNIT PRICE	ORIG COND	YEAR ON	YEAR ACTUAL	Q	% COND	OB/XF MKT VALUE	NOTES
1	0811	CONCRETE B	0	100	0	0	656.00	SF	5.20	5.20	100	2022	2022	3	100	3,411	

LAND DESCRIPTION

TOTAL OB/XF 3,411

LN	USE CODE	CLS	LAND USE DESCRIPTION	CAP	RD	LOC ZONE	FRONT	DEPTH	TOT LND UTS	UNIT TYPE	DT	DPTH FACT	% COND	TOT ADJ	UNIT PRICE	ADJ UNIT PRICE	LAND VALUE	OTHER ADJUSTMENTS AND NOTES	YEAR	DENSITY	DECL	FRZ	YR	CONSRV
1	000135	C	SFR CNSVTN	100			0.00	0.00	1.00	LT		1.00	1.00	1.00	75,000.00	75,000.00	75,000							

REVIEW DATE 08/09/2022 BY KWWW Total Acres: 0.00 Total Land Value: 75,000 Market: 0 Agricultural: 0 Common: 75,000 PRINTED 08/02/2023 BY SYS