LOT 63
VILLAGES OF WOODBRIDGE
PHASE IV A OR 2353/1725

NEWMON LINDA
95356 COLLEGE PKWY
FERNANDINA BEACH, FL 32034

2023

42-2N-28-1141-0063-0000

BUILDING CHARACTERISTICS

ELEMENT	CD	CONSTRUCTION
Exterior Wall	31	HARDIE BRD 100
Roof Structur	03	GABLE/HIP 100
Roof Cover	03	COMP SHNGL 100
Interior Wall	05	DRYWALL 100
Interior Floo	13	LVT/LAMNT 50
Interior Floo	14	CARPET 50
Air Condition	03	CENTRAL 100
Heating Type	04	AIR DUCTED 100
Bedrooms		3 100
Bathrooms		2 100
Frame	02	WOOD FRAME 100
Stories	1.	1. 100
Units		0 100
Occupancy	00	NONE 100
Quality	03	Quality Level 03
DOR CODE	0100	SINGLE FAMILY
MAP NUM		MKT AREA 04
NEIGHBORHOOD/LOC	4068.100	

AREA TYPE	TOTAL GROSS AREA	PCT OF BASE	TOT ADJ AREA	SUBAREA MARKET VALUE
BAS	1,601	100	1,601	157,170
FGR	581	55	320	31,414
FOP	43	30	13	1,276
PTO	88	5	4	393
TOTALS	2,313		1,938	190,253

MARKET ADJUSTMENTS

TYPE	MDL	EFF. AREA	TOT ADJ PTS	EFF. BASE RATE	REPL. COST NEW	AYB	EYB	ECON	FNCT		NORM	% COND
0100	01	1,938	108.7800	98.17	190,253	2021	2021	0	0	0	0.00	100.00

1 SINGLE FAM – 100% - 2022 Heated Area: 1601 HX Base Yr 2022

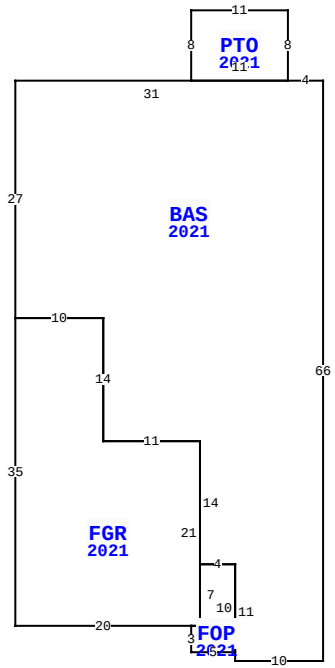

95356 COLLEGE PKWY, FERNANDINA BEACH

BLD DATE		LGL DATE	
XF DATE		LAND DATE	05/18/2023 MLU
INC DATE		AG DATE	

NASSAU COUNTY PROPERTY

PAGE 1 of 1 4

VALUATION SUMMARY

VALUATION BY		STANDARD
Tax Group: 4	Tax Dist:	
BUILDING MARKET VALUE		190,253
TOTAL MARKET OB/XF VALUE		3,401
TOTAL LAND VALUE - MARKET		75,000
TOTAL MARKET VALUE		268,654
SOH/AGL Deduction		80,708
ASSESSED VALUE		187,946
TOTAL EXEMPTION VALUE	HX HB	50,000
BASE TAXABLE VALUE		137,946
TOTAL JUST VALUE		268,654
NCON VALUE		0
INCOME VALUE		
PREVIOUS YEAR MKT VALUE		232,643

PERMIT NUM	DESCRIPTION	AMT	ISSUED
C2011779	CO ISSUED	0	06/17/2021
B2011779	NEW CONSTR	225,646	11/30/2020

SALES DATA

OFF RECORD Number	DATE	TYPE INST	Q U	V I	RSN CD	SALE PRICE
2485/0599	8/05/2021	WD	Q	I	02	350,000
GRANTOR: BRAND JAELA A						
GRANTEE: NEWMON LINDA						
2472/1646	6/18/2021	SW	Q	I	01	282,200
GRANTOR: RICHMOND AMERICAN HOM						
GRANTEE: BRAND JAELA A						

BUILDING NOTES

BUILDING DIMENSIONS

BAS=[YR=2021] W4 PTO=[YR=2021] N8 W11 S8 E11$ W31 S27
FGR=[YR=2021] S35 E20 FOP=[YR=2021] S3 E5 N10 W4 S7 W1$ E1
N21 W11 N14 W10$ E10 S14 E11 S14 E4 S11 E10 N66$.

EXTRA FEATURES

LN	OB/XF CODE	DESCRIPTION	BLD	CAP	L	W	UNITS	UT	Adj R	ADJ UNIT PRICE	ORIG COND	YEAR ON	YEAR ACTUAL	Q	% COND	OB/XF MKT VALUE	NOTES
1	0810	CONCRETE A	0	100	8	3	24.00	SF	6.50	6.50	100	2021	2021	3	100	156	
2	0811	CONCRETE B	0	100	0	0	624.00	SF	5.20	5.20	100	2021	2021	3	100	3,245	

LAND DESCRIPTION

TOTAL OB/XF 3,401

LN	USE CODE	CLS	LAND USE DESCRIPTION	CAP	RD	LOC ZONE	FRONT	DEPTH	TOT LND UTS	UNIT TYPE	DT	DPTH FACT	% COND	TOT ADJ	UNIT PRICE	ADJ UNIT PRICE	LAND VALUE	OTHER ADJUSTMENTS AND NOTES	YEAR	DENSITY	DECL	FRZ	YR	CONSRV
1	000134	C	SFR POND	100			0.00	0.00	1.00	LT		1.00	1.00	1.00	75,000.00	75,000.00	75,000							

REVIEW DATE 07/09/2021 BY KW Total Acres: 0.00 Total Land Value: 75,000 Market: 0 Agricultural: 0 Common: 75,000 PRINTED 08/02/2023 BY SYS