LOT 18
VILLAGES OF WOODBRIDGE
PHASE IV B OR 2438/574

HARDEN JOHATHAN RYAN
95141 COLNAGO CT
FERNANDINA BEACH, FL 32034

2023

42-2N-28-1141-0018-0000

NASSAU COUNTY PROPERTY

BUILDING CHARACTERISTICS

ELEMENT	CD	CONSTRUCTION
Exterior Wall	31	HARDIE BRD 100
Roof Structur	03	GABLE/HIP 100
Roof Cover	03	COMP SHNGL 100
Interior Wall	05	DRYWALL 100
Interior Floo	13	LVT/LAMNT 50
Interior Floo	14	CARPET 50
Air Condition	03	CENTRAL 100
Heating Type	04	AIR DUCTED 100
Bedrooms		4 100
Bathrooms		2 100
Frame	02	WOOD FRAME 100
Stories	1.	1. 100
Units		0 100
Occupancy	00	NONE 100
Quality	03	Quality Level 03
DOR CODE	0100	SINGLE FAMILY
MAP NUM		MKT AREA 04
NEIGHBORHOOD/LOC	4068.100	

AREA TYPE	TOTAL GROSS AREA	PCT OF BASE	TOT ADJ AREA	SUBAREA MARKET VALUE
BAS	1,816	100	1,816	176,679
FGR	661	55	364	35,414
FOP	24	30	7	681
FSP	224	40	90	8,756
TOTALS	2,725		2,277	221,529

MARKET ADJUSTMENTS

TYPE	MDL	EFF. AREA	TOT ADJ PTS	EFF. BASE RATE	REPL. COST NEW	AYB	EYB	ECON	FNCT		NORM	% COND
0100	01	2,277	107.8000	97.29	221,529	2022	2022	0	0	0	0.00	100.00

1 SINGLE FAM – 100% - 2023 Heated Area: 1816 HX Base Yr 2023

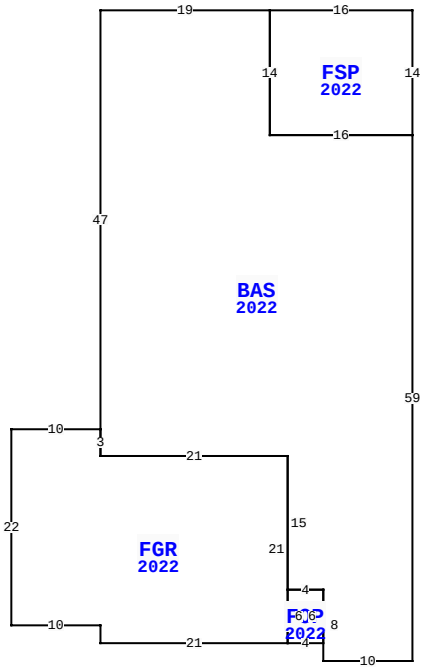

95141 COLNAGO CT, FERNANDINA BEACH

BLD DATE		LGL DATE	
XF DATE		LAND DATE	05/18/2023 MLU
INC DATE		AG DATE	

VALUATION SUMMARY

VALUATION BY		STANDARD
Tax Group: 4	Tax Dist:	
BUILDING MARKET VALUE		221,529
TOTAL MARKET OB/XF VALUE		5,328
TOTAL LAND VALUE - MARKET		75,000
TOTAL MARKET VALUE		301,857
SOH/AGL Deduction		0
ASSESSED VALUE		301,857
TOTAL EXEMPTION VALUE	HX HB	50,000
BASE TAXABLE VALUE		251,857
TOTAL JUST VALUE		301,857
NCON VALUE		226,857
INCOME VALUE		
PREVIOUS YEAR MKT VALUE		65,000

PERMIT NUM	DESCRIPTION	AMT	ISSUED
C2107462	CO ISSUED	0	02/14/2022
B2107462	NEW CONSTR	277,785	06/09/2021

SALES DATA

OFF RECORD Number	DATE	TYPE INST	Q / U	V / I	RSN CD	SALE PRICE
2542/0672	2/18/2022	SW	Q	I	01	322,000
GRANTOR: RICHMOND AMERICAN HOM						
GRANTEE: HARDEN JONATHAN A						
2445/0019	3/23/2021	SW	Q	V	05	675,700
GRANTOR: WOODBRIDGE NASSAU LLC						
GRANTEE: RICHMOND AMERICAN H						

BUILDING NOTES

BUILDING DIMENSIONS

FSP=[YR=2022] W16 BAS=[YR=2022] W19 S47 FGR=[YR=2022] W10 S22 E10 S2 E21 FOP=[YR=2022] E4 N6 W4 S6$ N21 W21 N3$ S3 E21 S15 E4 S8 E10 N59 W16 N14$ S14 E16 N14$.

EXTRA FEATURES

LN	OB/XF CODE	DESCRIPTION	BLD	CAP	L	W	UNITS	UT	Adj R	ADJ UNIT PRICE	ORIG COND	YEAR ON	YEAR ACTUAL	Q	% COND	OB/XF MKT VALUE	NOTES
1	0812	CONCRETE C	0	100	0	0	1,332.00	SF	4.00	4.00	100	2022	2022	3	100	5,328	

LAND DESCRIPTION

TOTAL OB/XF 5,328

LN	USE CODE	CLS	LAND USE DESCRIPTION	CAP	RD	LOC ZONE	FRONT	DEPTH	TOT LND UTS	UNIT TYPE	DT	DPTH FACT	% COND	TOT ADJ	UNIT PRICE	ADJ UNIT PRICE	LAND VALUE	OTHER ADJUSTMENTS AND NOTES	YEAR	DENSITY	DECL	FRZ	YR	CONSRV
1	000134	C	SFR POND	100			0.00	0.00	1.00	LT		1.00	1.00	1.00	75,000.00	75,000.00	75,000							

REVIEW DATE 04/04/2022 BY DJ Total Acres: 0.00 Total Land Value: 75,000 Market: 0 Agricultural: 0 Common: 75,000 PRINTED 08/02/2023 BY SYS