LOT 28
1998 FITZ DW/MH
WIDE ROAD ACRES PB 5/404-406

ALLEN NICOLE/
85456 NORTH HARTS RD
YULEE, FL 32097

2023

42-2N-27-4487-0028-0000

NASSAU COUNTY PROPERTY

BUILDING CHARACTERISTICS

ELEMENT	CD	CONSTRUCTION
Exterior Wall	10	ABOVE AVG 90
Exterior Wall	21	STONE 10
Roof Structur	08	IRREGULAR 100
Roof Cover	03	COMP SHNGL 100
Interior Wall	05	DRYWALL 100
Interior Floo	08	SHT VINYL 50
Interior Floo	14	CARPET 50
Air Condition	03	CENTRAL 100
Heating Type	04	AIR DUCTED 100
Bedrooms		3 100
Bathrooms		2.5 100
Frame	02	WOOD FRAME 100
Stories	1.	1. 100
Units		0 100
Occupancy	00	NONE 100
Quality	02	Quality Level 02

DOR CODE	0100	SINGLE FAMILY	
MAP NUM		MKT AREA	04
NEIGHBORHOOD/LOC	4053.00		

AREA TYPE	TOTAL GROSS AREA	PCT OF BASE	TOT ADJ AREA	SUBAREA MARKET VALUE
BAS	2,135	100	2,135	253,722
FGR	546	55	300	35,652
FOP	36	30	11	1,307
FOP	160	30	48	5,704
FUS	286	100	286	33,988
TOTALS	3,163		2,780	330,372

MARKET ADJUSTMENTS

TYPE	MDL	EFF. AREA	TOT ADJ PTS	EFF. BASE RATE	REPL. COST NEW	AYB	EYB	ECON	FNCT		NORM	% COND
0900	01	2,780	101.1408	120.10	333,878	2019	2019	0	0	0	1.05	98.95

1 SNGL FAM – 100% - 2020 Heated Area: 2421 HX Base Yr 2020

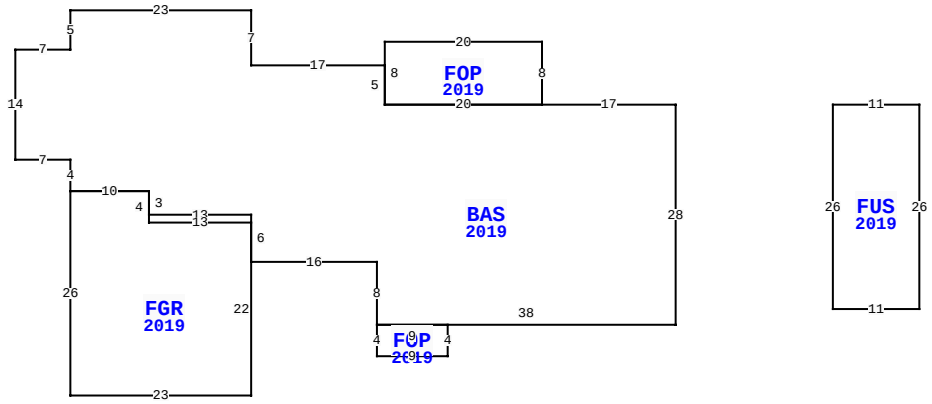

85456 NORTH HARTS RD, YULEE

BLD DATE	03/03/2023	NW	LGL DATE
XF DATE			LAND DATE
INC DATE			AG DATE

NASSAU COUNTY PROPERTY — VALUATION SUMMARY

VALUATION BY		STANDARD
Tax Group: 4	Tax Dist:	
BUILDING MARKET VALUE		330,372
TOTAL MARKET OB/XF VALUE		18,649
TOTAL LAND VALUE - MARKET		132,800
TOTAL MARKET VALUE		481,821
SOH/AGL Deduction		181,002
ASSESSED VALUE		300,819
TOTAL EXEMPTION VALUE	HX HB	50,000
BASE TAXABLE VALUE		250,819
TOTAL JUST VALUE		481,821
NCON VALUE		0
INCOME VALUE		
PREVIOUS YEAR MKT VALUE		349,864

PERMIT NUM	DESCRIPTION	AMT	ISSUED
19007103	ADDITION	35,819	07/02/2019
19005449	CO ISSUED	0	05/24/2019
18011298	NEW CONSTR	325,154	11/09/2018
971969	MH MOVE-ON	0	10/01/1997

SALES DATA

OFF RECORD Number	DATE	TYPE INST	Q / U	V / I	RSN CD	SALE PRICE
9999/9999	7/20/2016	CN	U	I	11	100
GRANTOR: EMC MORTGAGE LOAN TRU						
GRANTEE: ALLEN NICOLE						
9999/9999	11/02/2015	CN	U	I	12	28,000
GRANTOR: EMC MORTGAGE LOAN TRU						
GRANTEE: ALLEN NICOLE						

BUILDING NOTES

BUILDING DIMENSIONS

BAS=[YR=2019] W17 FOP=[YR=2019] N8 W20 S8 E20$ W20 N5 W17 N7 W23 S5 W7 S14 E7 S4 FGR=[YR=2019] S26 E23 N22 W13 N4 W10$ E10 S3 E13 S6 E16 S8 FOP=[YR=2019] S4 E9 N4 W9$ E38 N28$ PTR=E20 FUS=[YR=2019] E11 S26 W11 N26$ W20$.

EXTRA FEATURES

LN	OB/XF CODE	DESCRIPTION	BLD	CAP	L	W	UNITS	UT	Adj R	ADJ UNIT PRICE	ORIG COND	YEAR ON	YEAR ACTUAL	Q	% COND	OB/XF MKT VALUE	NOTES
1	0811	CONCRETE B	0	100	0	0	967.00	SF	5.20	5.20	100	2019	2019	3	99	4,978	
2	0510	GARAGE WD-	0	100	35	12	420.00	SF	35.00	35.00	100	2019	2019	3	93	13,671	

LAND DESCRIPTION

TOTAL OB/XF 18,649

LN	USE CODE	CLS	LAND USE DESCRIPTION	CAP	RD	LOC ZONE	FRONT	DEPTH	TOT LND UTS	UNIT TYPE	DT	DPTH FACT	% COND	TOT ADJ	UNIT PRICE	ADJ UNIT PRICE	LAND VALUE	OTHER ADJUSTMENTS AND NOTES	YEAR	DENSITY	DECL	FRZ	YR	CONSRV
1	000115	C	SFR ACRES	100		OR	0.00	0.00	1.66	AC		1.00	1.00	1.00	80,000.00	80,000.00	132,800							

REVIEW DATE 12/12/2019 BY NWTW Total Acres: 1.66 Total Land Value: 132,800 Market: 0 Agricultural: 0 Common: 132,800 PRINTED 08/02/2023 BY SYS