LOT 26
IN OR 2145/9
WIDE ROAD ACRES PB 5/404-406

CHILDERS MICKEY & SUSANNE
85432 NORTH HARTS RD
YULEE, FL 32097

2023

42-2N-27-4487-0026-0000

BUILDING CHARACTERISTICS

ELEMENT	CD	CONSTRUCTION
Exterior Wall	05	AVERAGE 100
Roof Structur	03	GABLE/HIP 100
Roof Cover	03	COMP SHNGL 100
Interior Wall	05	DRYWALL 100
Interior Floo	13	LVT/LAMNT 100
Air Condition	03	CENTRAL 100
Heating Type	04	AIR DUCTED 100
Bedrooms		3 100
Bathrooms		2 100
Frame	02	WOOD FRAME 100
Stories	2.	2. 100
Units		0 100
Occupancy	00	NONE 100
Quality	03	Quality Level 03
DOR CODE	0100	SINGLE FAMILY
MAP NUM		MKT AREA 04
NEIGHBORHOOD/LOC	4053.00	

AREA TYPE	TOTAL GROSS AREA	PCT OF BASE	TOT ADJ AREA	SUBAREA MARKET VALUE
BAS	1,428	100	1,428	129,900
FGR	482	55	265	24,106
FOP	45	30	14	1,273
FSP	192	40	77	7,004
FST	288	55	158	14,373
PTO	9	5	0	0
TOTALS	2,444		1,942	176,656

MARKET ADJUSTMENTS

TYPE	MDL	EFF. AREA	TOT ADJ PTS	EFF. BASE RATE	REPL. COST NEW	AYB	EYB	ECON	FNCT		NORM	% COND
0100	01	1,942	107.8000	97.29	188,937	2008	2008	0	0	0	6.50	93.50

1 SINGLE FAM – 100% - 2009 Heated Area: 1428 HX Base Yr 2009

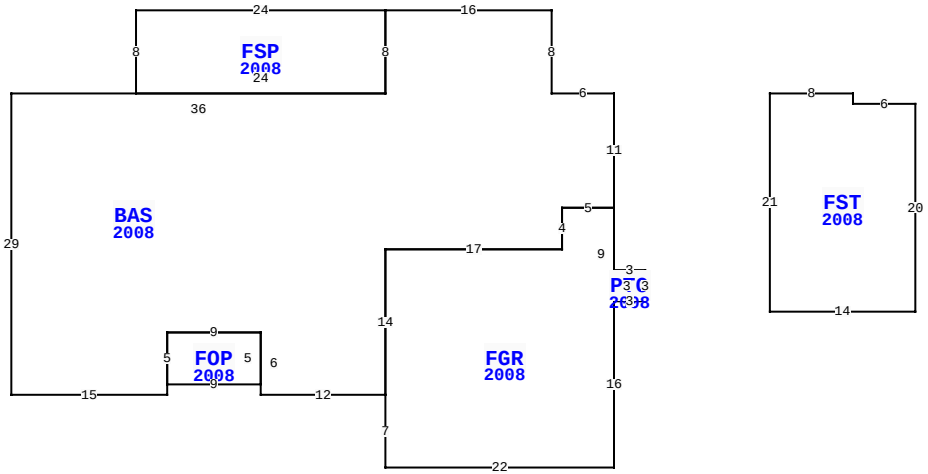

85432 NORTH HARTS RD, YULEE

BLD DATE	02/27/2009 KK	LGL DATE	
XF DATE		LAND DATE	
INC DATE		AG DATE	

NASSAU COUNTY PROPERTY

PAGE 1 of 1 4

VALUATION SUMMARY

VALUATION BY		STANDARD
Tax Group: 4	Tax Dist:	
BUILDING MARKET VALUE		176,656
TOTAL MARKET OB/XF VALUE		13,847
TOTAL LAND VALUE - MARKET		102,400
TOTAL MARKET VALUE		292,903
SOH/AGL Deduction		145,900
ASSESSED VALUE		147,003
TOTAL EXEMPTION VALUE	HX HB VX	55,000
BASE TAXABLE VALUE		92,003
TOTAL JUST VALUE		292,903
NCON VALUE		0
INCOME VALUE		
PREVIOUS YEAR MKT VALUE		225,132

PERMIT NUM	DESCRIPTION	AMT	ISSUED
R11468	REPAIR/RRF	1,000	08/01/2008
B21781	NON AG BARN	8,640	08/01/2008
M13768	MECH OTHER	0	04/01/2008
C21184	CO ISSUED	0	03/01/2008
R11098	REPAIR/RRF	2,000	03/01/2008
B21184	NEW CONSTR	136,356	03/01/2008

SALES DATA

OFF RECORD Number	DATE	TYPE INST	Q / U	V / I	RSN CD	SALE PRICE
2145/0009	8/23/2017	QC	U	I	11	82,800
GRANTOR: FRANCISCO SUSANNE M						
GRANTEE: CHILDERS MICKEY & S						
1402/1916	4/11/2006	WD	Q	V		50,000
GRANTOR: LAIRD GARY W						
GRANTEE: FRANCISCO SUSANNE M						

BUILDING NOTES

BUILDING DIMENSIONS

BAS=[YR=2008] W6 N8 W16 FSP=[YR=2008] W24 S8 E24 N8$ S8 W36 S29 E15 N1 FOP=[YR=2008] E9 N5 W9 S5$ N5 E9 S6 E12 FGR=[YR=2008] S7 E22 N16 PTO=[YR=2008] E3 N3 W3 S3$ N9 W5 S4 W17 S14$ N14 E17 N4 E5 N11$ PTR=E15 FST=[YR=2008] E8 S1 E6 S20 W14 N21$ W15$.

EXTRA FEATURES

LN	OB/XF CODE	DESCRIPTION	BLD	CAP	L	W	UNITS	UT	Adj R	ADJ UNIT PRICE	ORIG COND	YEAR ON	YEAR ACTUAL	Q	% COND	OB/XF MKT VALUE	NOTES
1	0812	CONCRETE C	0	100	0	0	1,679.00	SF	4.00	4.00	100	2008	2008	3	90	6,044	
2	0810	CONCRETE A	0	100	0	0	97.00	SF	6.50	6.50	100	2008	2008	3	90	567	
3	0504	FP-ELECTRI	0	100	0	0	1.00	UT	2,000.00	2,000.00	100	2008	2008	3	93	1,860	
4	0680	POLE SHED	0	100	40	24	960.00	SF	10.00	10.00	100	2008	2008	3	56	5,376	

LAND DESCRIPTION

TOTAL OB/XF 13,847

LN	USE CODE	CLS	LAND USE DESCRIPTION	CAP	RD	LOC ZONE	FRONT	DEPTH	TOT LND UTS	UNIT TYPE	DT	DPTH FACT	% COND	TOT ADJ	UNIT PRICE	ADJ UNIT PRICE	LAND VALUE	OTHER ADJUSTMENTS AND NOTES	YEAR	DENSITY	DECL	FRZ	YR	CONSRV
1	000115	C	SFR ACRES	100		OR	0.00	0.00	1.28	AC		1.00	1.00	1.00	80,000.00	80,000.00	102,400							

REVIEW DATE 03/02/2018 BY SBX Total Acres: 1.28 Total Land Value: 102,400 Market: 0 Agricultural: 0 Common: 102,400 PRINTED 08/02/2023 BY SYS