BLOCK 2 TRACT B
IN OR 2267/1905
TRINITY CIRCLE SUB PB 3/34

COR LEONIS LLC
863688 SR 200 1-529
YULEE, FL 32097

2023

42-2N-27-4380-0002-000B

BUILDING CHARACTERISTICS

ELEMENT	CD	CONSTRUCTION
Exterior Wall	15	CONC BLOCK 80
Exterior Wall	05	AVERAGE 20
Roof Structur	04	WOOD TRUSS 100
Roof Cover	03	COMP SHNGL 100
Interior Wall	05	DRYWALL 100
Interior Floo	05	ASPH TILE 50
Interior Floo	14	CARPET 50
Air Condition	03	CENTRAL 100
Heating Type	04	AIR DUCTED 100
Fixtures		10 100
Frame	03	MASONRY 100
Story Height		8 100
RMS		7 100
Stories	2.	2. 100
Units		0 100
BUD8 Adjustme	04	DIST 01 100
Occupancy	OO	OWNER OCC 100
Quality	03	Quality Level 03
DOR CODE	1100	STORES, 1 STORY
MAP NUM		MKT AREA 04
NEIGHBORHOOD/LOC	4051.00	

AREA TYPE	TOTAL GROSS AREA	PCT OF BASE	TOT ADJ AREA	SUBAREA MARKET VALUE
BAS	712	100	712	47,840
BAS	1,208	100	1,208	81,166
FOP	192	30	58	3,897
FUS	768	100	768	51,602
UST	288	40	115	7,727
TOTALS	3,168		2,861	192,230

MARKET ADJUSTMENTS

TYPE	MDL	EFF. AREA	TOT ADJ PTS	EFF. BASE RATE	REPL. COST NEW	AYB	EYB	ECON	FNCT		NORM	% COND
1101	04	2,861	91.7280	134.38	384,461	1966	1966	0	0	0	50.00	50.00

1 RETAILSTOR – 0% - 0 Heated Area: 2688 HX Base Yr

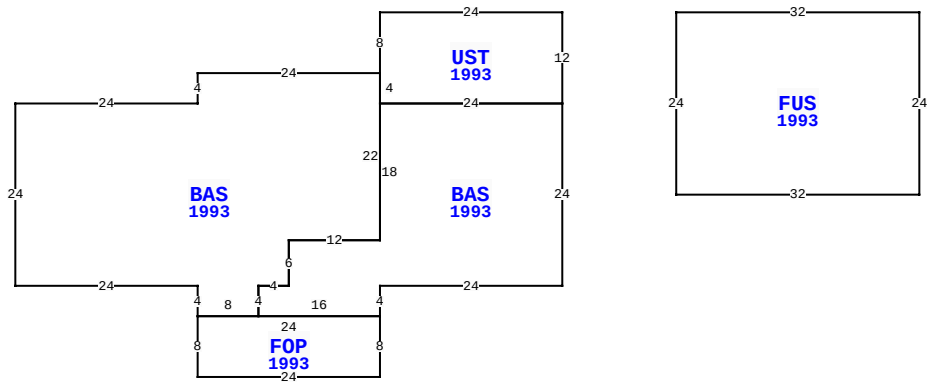

85428 TRINITY CIR, YULEE

BLD DATE	07/25/2018	KKX	LGL DATE
XF DATE	07/25/2018	KKX	LAND DATE
INC DATE			AG DATE

NASSAU COUNTY PROPERTY

PAGE 1 of 1 4

VALUATION SUMMARY

VALUATION BY	STANDARD
Tax Group: 4	Tax Dist:
BUILDING MARKET VALUE	192,230
TOTAL MARKET OB/XF VALUE	10,608
TOTAL LAND VALUE - MARKET	92,394
TOTAL MARKET VALUE	295,232
SOH/AGL Deduction	83,581
ASSESSED VALUE	211,651
TOTAL EXEMPTION VALUE	0
BASE TAXABLE VALUE	211,651
TOTAL JUST VALUE	295,232
NCON VALUE	0
INCOME VALUE	
PREVIOUS YEAR MKT VALUE	204,527

PERMIT NUM	DESCRIPTION	AMT	ISSUED
M015367	REMODEL	13,500	09/01/2001
B9905701	REMODEL	150	01/01/1999
5678	REMODEL	1,079	01/30/1989
3377	REMODEL	0	01/30/1989
5415	REMODEL	4,800	01/09/1989

SALES DATA

OFF RECORD Number	DATE	TYPE INST	Q U /	V I /	RSN CD	SALE PRICE
2267/1905	4/12/2019	WD	U	I	11	100
GRANTOR: MARGARET INC						
GRANTEE: COR LEONIS LLC						
2262/1087	3/20/2019	WD	U	I	11	100
GRANTOR: MARGARET INC						
GRANTEE: COR LEONIS LLC						

BUILDING NOTES

BUILDING DIMENSIONS

UST=[YR=1993] W24 S8 BAS=[YR=1993] W24 S4 W24 S24 E24 S4
FOP=[YR=1993] S8 E24 N8 BAS=[YR=1993] N4 E24 N24 W24 S18
W12 S6 W4 S4 E16 $ W24 $ E8 N4 E4 N6 E12 N22 $ S4 E24 N12 $
PTR= E15 FUS=[YR=1993] E32 S24 W32 N24 $ W15 $.

EXTRA FEATURES

LN	OB/XF CODE	DESCRIPTION	BLD	CAP	L	W	UNITS	UT	Adj R	ADJ UNIT PRICE	ORIG COND	YEAR ON	YEAR ACTUAL	Q	% COND	OB/XF MKT VALUE	NOTES
1	0803	ASPHALT C	0	0	0	0	3,792.00	SF	2.00	2.00	100	1989	1989	3	50	3,792	
2	0810	CONCRETE A	0	0	13	24	312.00	SF	6.50	6.50	100	1960	1960	3	20	406	
3	0504	FP-ELECTRI	0	0	0	0	1.00	UT	2,000.00	2,000.00	100	1960	1960	3	23	460	
4	0351	CARPORT MT	0	0	18	12	216.00	SF	10.00	10.00	100	2007	2007	3	35	756	
5	0351	CARPORT MT	0	0	18	19	342.00	SF	10.00	10.00	100	2007	2007	3	35	1,197	
6	0443	STK FNC 6'	0	0	0	0	192.00	LF	10.00	10.00	100	2006	2006	3	31	595	
7	0940	SHEDS/PORT	0	0	18	8	144.00	SF	30.00	30.00	100	2000	2000	3	20	864	
8	0940	SHEDS/PORT	0	0	12	8	96.00	SF	30.00	30.00	100	2009	2009	3	45	1,296	
9	0940	SHEDS/PORT	0	0	6	6	36.00	SF	30.00	30.00	100	2009	2009	3	45	486	
10	0351	CARPORT MT	0	0	18	12	216.00	SF	10.00	10.00	100	2007	2007	3	35	756	

LAND DESCRIPTION

TOTAL OB/XF 10,608

LN	USE CODE	CLS	LAND USE DESCRIPTION	CAP	RD	LOC ZONE	FRONT	DEPTH	TOT LND UTS	UNIT TYPE	DT	DPTH FACT	% COND	TOT ADJ	UNIT PRICE	ADJ UNIT PRICE	LAND VALUE	OTHER ADJUSTMENTS AND NOTES	YEAR	DENSITY	DECL	FRZ	YR	CONSRV
1	001100	C	STORE 1FLR	0	0004	CG	154.00	200.00	30,798.00	SF		1.00	1.00	1.00	3.00	3.00	92,394							

REVIEW DATE 07/25/2018 BY KKX Total Acres: 0.00 Total Land Value: 92,394 Market: 0 Agricultural: 0 Common: 92,394 PRINTED 08/02/2023 BY SYS