LOT 40
HIDEAWAY PHASE 1C OR 2378/1584

BRISCOE BRADLEY A & APRIL D
86477 MELODY LANE
YULEE, FL 32097

2023

42-2N-27-4374-0040-0000

NASSAU COUNTY PROPERTY

PAGE 1 of 1 4

BUILDING CHARACTERISTICS

ELEMENT	CD	CONSTRUCTION
Exterior Wall	30	VINYL 100
Roof Structur	03	GABLE/HIP 100
Roof Cover	03	COMP SHNGL 100
Interior Wall	05	DRYWALL 100
Interior Floo	11	CLAY TILE 50
Interior Floo	14	CARPET 50
Air Condition	03	CENTRAL 100
Heating Type	04	AIR DUCTED 100
Bedrooms		4 100
Bathrooms		2.5 100
Frame	02	WOOD FRAME 100
Stories	2.	2. 100
Units		0 100
Occupancy	00	NONE 100
Quality	05	Quality Level 05

DOR CODE 0100 SINGLE FAMILY
MAP NUM | MKT AREA 04
NEIGHBORHOOD/LOC 4071.00

AREA TYPE	TOTAL GROSS AREA	PCT OF BASE	TOT ADJ AREA	SUBAREA MARKET VALUE
BAS	1,650	100	1,650	166,518
FGR	460	55	253	25,533
FOP	55	30	16	1,615
FOP	140	30	42	4,239
FUS	1,125	100	1,125	113,535
STR	39	10	4	404
TOTALS	3,469		3,090	311,843

MARKET ADJUSTMENTS

TYPE	MDL	EFF. AREA	TOT ADJ PTS	EFF. BASE RATE	REPL. COST NEW	AYB	EYB	ECON	FNCT		NORM	% COND
0100	01	3,090	111.8260	100.92	311,843	2022	2022	0	0	0	0.00	100.00

1 SINGLE FAM – 100% - 2023 Heated Area: 2775 HX Base Yr 2023

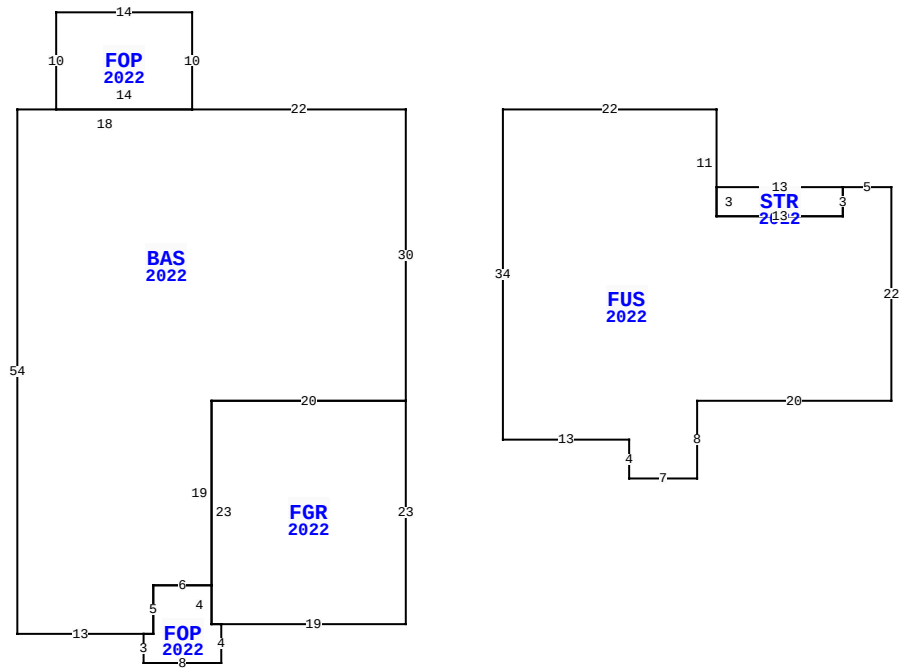

86477 MELODY LN, YULEE

BLD DATE		LGL DATE	
XF DATE		LAND DATE	
INC DATE		AG DATE	

VALUATION SUMMARY

VALUATION BY		STANDARD
Tax Group: 4	Tax Dist:	
BUILDING MARKET VALUE		311,843
TOTAL MARKET OB/XF VALUE		3,731
TOTAL LAND VALUE - MARKET		50,000
TOTAL MARKET VALUE		365,574
SOH/AGL Deduction		104,153
ASSESSED VALUE		261,421
TOTAL EXEMPTION VALUE	HX HB VX	55,000
BASE TAXABLE VALUE		206,421
TOTAL JUST VALUE		365,574
NCON VALUE		314,556
INCOME VALUE		
PREVIOUS YEAR MKT VALUE		50,000

PERMIT NUM	DESCRIPTION	AMT	ISSUED
22011617	CO ISSUED	0	07/29/2022
22000544	NEW CONSTR	448,487	01/10/2022

SALES DATA

OFF RECORD Number	DATE	TYPE INST	Q / U	V / I	RSN CD	SALE PRICE
2587/0122	8/25/2022	WD	Q	I	01	501,900
GRANTOR: SEDA CONSTRUCTION COM						
GRANTEE: BRISCOE BRADLEY A &						
2554/0920	4/11/2022	WD	U	V	30	75,000
GRANTOR: SEMANIK EQUITY DEVELO						
GRANTEE: SEDA CONSTRUCTION C						

BUILDING NOTES

BUILDING DIMENSIONS

BAS=[YR=2022] W22 FOP=[YR=2022] N10 W14 S10 E14$ W18 S54 E13 FOP=[YR=2022] S3 E8 N4 FGR=[YR=2022] E19 N23 W20 S23 E1$ W1 N4 W6 S5 W1$ E1 N5 E6 N19 E20 N30$ PTR=E10 FUS=[YR=2022] S34 E13 S4 E7 N8 E20 N22 W5 STR=[YR=2022] W13 S3 E13 N3$ S3 W13 N11 W22$ W10$.

EXTRA FEATURES

LN	OB/XF CODE	DESCRIPTION	BLD	CAP	L	W	UNITS	UT	Adj R	ADJ UNIT PRICE	ORIG COND	YEAR ON	YEAR ACTUAL	Q	% COND	OB/XF MKT VALUE	NOTES
1	0810	CONCRETE A	0	100	0	0	574.00	SF	6.50	6.50	100	2022	2022	3	100	3,731	

LAND DESCRIPTION

TOTAL OB/XF 3,731

LN	USE CODE	CLS	LAND USE DESCRIPTION	CAP	RD	LOC ZONE	FRONT	DEPTH	TOT LND UTS	UNIT TYPE	DT	DPTH FACT	% COND	TOT ADJ	UNIT PRICE	ADJ UNIT PRICE	LAND VALUE	OTHER ADJUSTMENTS AND NOTES	YEAR	DENSITY	DECL	FRZ	YR	CONSRV
1	000000	C	VAC RES	100			0.00	0.00	1.00	LT		1.00	1.00	1.00	50,000.00	50,000.00	50,000							

REVIEW DATE 07/11/2022 BY NW Total Acres: 0.00 Total Land Value: 50,000 Market: 0 Agricultural: 0 Common: 50,000 PRINTED 08/02/2023 BY SYS