LOT 28
HIDEAWAY PHASE 1C OR 2378/1584

STUBBS GARY L & TONYA A
86537 SECLUDED PL
YULEE, FL 32097

2023

42-2N-27-4374-0028-0000

NASSAU COUNTY PROPERTY

BUILDING CHARACTERISTICS

ELEMENT	CD	CONSTRUCTION
Exterior Wall	30	VINYL 100
Roof Structur	03	GABLE/HIP 100
Roof Cover	03	COMP SHNGL 100
Interior Wall	05	DRYWALL 100
Interior Floo	13	LVT/LAMNT 50
Interior Floo	14	CARPET 50
Air Condition	03	CENTRAL 100
Heating Type	04	AIR DUCTED 100
Bedrooms		4 100
Bathrooms		2.5 100
Frame	02	WOOD FRAME 100
Stories	2.	2. 100
Units		0 100
Occupancy	00	NONE 100
Quality	05	Quality Level 05
DOR CODE	0100	SINGLE FAMILY
MAP NUM		MKT AREA 04
NEIGHBORHOOD/LOC	4071.00	

AREA TYPE	TOTAL GROSS AREA	PCT OF BASE	TOT ADJ AREA	SUBAREA MARKET VALUE
BAS	993	100	993	100,313
FGR	447	55	246	24,851
FOP	32	30	10	1,010
FOP	160	30	48	4,849
FUS	1,468	100	1,468	148,297
STR	52	10	5	505
TOTALS	3,152		2,770	279,825

MARKET ADJUSTMENTS

TYPE	MDL	EFF. AREA	TOT ADJ PTS	EFF. BASE RATE	REPL. COST NEW	AYB	EYB	ECON	FNCT		NORM	% COND
0100	01	2,770	111.9360	101.02	279,825	2021	2021	0	0	0	0.00	100.00

1 SINGLE FAM – 0% - 0 Heated Area: 2461 HX Base Yr

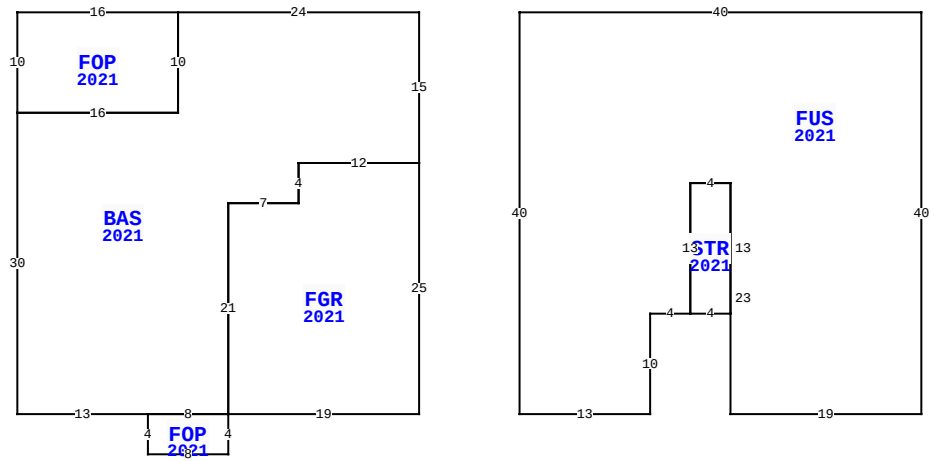

86537 SECLUDED PL, YULEE

BLD DATE	05/17/2022 NW	LGL DATE	
XF DATE		LAND DATE	
INC DATE		AG DATE	

NASSAU COUNTY PROPERTY — VALUATION SUMMARY

VALUATION BY	STANDARD
Tax Group: 4	Tax Dist:
BUILDING MARKET VALUE	279,825
TOTAL MARKET OB/XF VALUE	5,632
TOTAL LAND VALUE - MARKET	50,000
TOTAL MARKET VALUE	335,457
SOH/AGL Deduction	21,676
ASSESSED VALUE	313,781
TOTAL EXEMPTION VALUE	0
BASE TAXABLE VALUE	313,781
TOTAL JUST VALUE	335,457
NCON VALUE	0
INCOME VALUE	
PREVIOUS YEAR MKT VALUE	285,255

PERMIT NUM	DESCRIPTION	AMT	ISSUED
20012299	NEW CONSTR	330,434	12/10/2020

SALES DATA

OFF RECORD Number	DATE	TYPE INST	Q / U	V / I	RSN CD	SALE PRICE
2484/0371	7/30/2021	WD	Q	I	01	347,500
GRANTOR: SEDA CONSTRUCTION COM						
GRANTEE: STUBBS GARY L & TON						
2441/1868	3/02/2021	WD	U	V	30	60,000
GRANTOR: SEMANIK EQUITY DEVELO						
GRANTEE: SEDA CONSTRUCTION C						

BUILDING NOTES

BUILDING DIMENSIONS

BAS=[YR=2021] W24 FOP=[YR=2021] W16 S10 E16 N10$ S10 W16 S30 E13 FOP=[YR=2021] S4 E8 N4 FGR=[YR=2021] E19 N25 W12 S4 W7 S21$ W8$ E8 N21 E7 N4 E12 N15$ PTR=E10 FUS=[YR=2021] S40 E13 N10 E4 STR=[YR=2021] N13 E4 S13 W4$ N13 E4 S23 E19 N40 W40$ W10$.

EXTRA FEATURES

L N	OB/XF CODE	DESCRIPTION	BLD	CAP	L	W	UNITS	UT	Adj R	ADJ UNIT PRICE	ORIG COND	YEAR ON	YEAR ACTUAL	Q	% COND	OB/XF MKT VALUE	NOTES
1	0811	CONCRETE B	0	0	0	0	1,083.00	SF	5.20	5.20	100	2021	2021	3	100	5,632	

LAND DESCRIPTION

TOTAL OB/XF 5,632

L N	USE CODE	CLS	LAND USE DESCRIPTION	CAP	R D	LOC ZONE	FRONT	DEPTH	TOT LND UTS	UNIT TYPE	D T	DPTH FACT	% COND	TOT ADJ	UNIT PRICE	ADJ UNIT PRICE	LAND VALUE	OTHER ADJUSTMENTS AND NOTES	YEAR	DENSITY	DECL	FRZ	YR	CONSRV
1	000100	C	SFR	0			0.00	0.00	1.00	LT		1.00	1.00	1.00	50,000.00	50,000.00	50,000							

REVIEW DATE 06/30/2021 BY NW Total Acres: 0.00 Total Land Value: 50,000 Market: 0 Agricultural: 0 Common: 50,000 PRINTED 08/02/2023 BY SYS