LOT 47
HIDEAWAY PHASE 1B PBK 8/301

RICHARDSON WILLIE C & DIANE W
86573 LAZY LAKE CIR
YULEE, FL 32097

2023

42-2N-27-4373-0047-0000

NASSAU COUNTY PROPERTY

PAGE 1 of 1 4

BUILDING CHARACTERISTICS

ELEMENT	CD	CONSTRUCTION
Exterior Wall	10	ABOVE AVG 100
Roof Structur	03	GABLE/HIP 100
Roof Cover	03	COMP SHNGL 100
Interior Wall	05	DRYWALL 100
Interior Floo	11	CLAY TILE 60
Interior Floo	14	CARPET 40
Air Condition	03	CENTRAL 100
Heating Type	04	AIR DUCTED 100
Bedrooms		4 100
Bathrooms		2 100
Frame	02	WOOD FRAME 100
Stories	2.	2. 100
Units		0 100
Occupancy	00	NONE 100
Quality	05	Quality Level 05

DOR CODE 0100 SINGLE FAMILY
MAP NUM | MKT AREA 04
NEIGHBORHOOD/LOC 4071.0100

AREA TYPE	TOTAL GROSS AREA	PCT OF BASE	TOT ADJ AREA	SUBAREA MARKET VALUE
BAS	1,666	100	1,666	185,146
FGR	455	55	250	27,783
FOP	94	30	28	3,111
FSP	130	40	52	5,779
FST	15	55	8	890
FUS	371	100	371	41,230
PTO	70	5	4	445
STR	48	10	5	555
TOTALS	2,849		2,384	264,938

MARKET ADJUSTMENTS

TYPE	MDL	EFF. AREA	TOT ADJ PTS	EFF. BASE RATE	REPL. COST NEW	AYB	EYB	ECON	FNCT		NORM	% COND
0100	01	2,384	123.7544	111.69	266,269	2020	2020	0	0	0	0.50	99.50

1 SINGLE FAM – 100% - 2021 Heated Area: 2037 HX Base Yr 2021

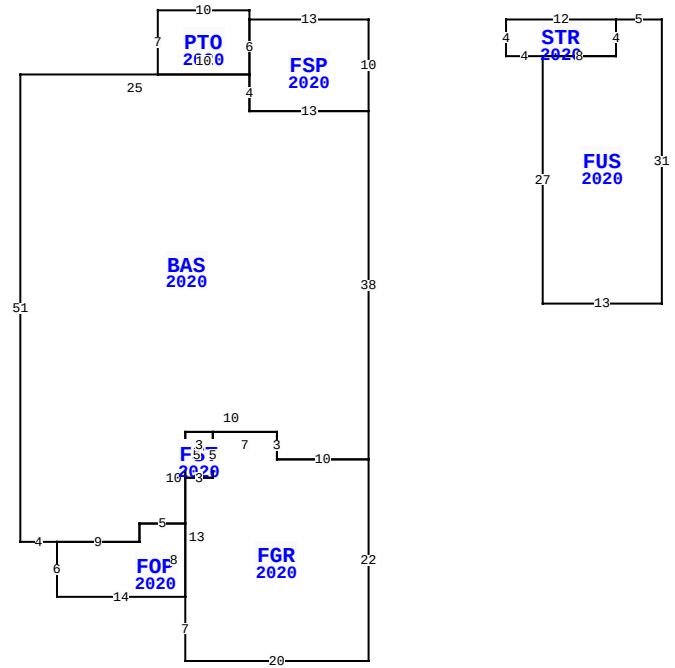

86573 LAZY LAKE CIR, YULEE

BLD DATE	05/17/2022 NW	LGL DATE	
XF DATE		LAND DATE	
INC DATE		AG DATE	

VALUATION SUMMARY

VALUATION BY		STANDARD
Tax Group: 4	Tax Dist:	
BUILDING MARKET VALUE		264,938
TOTAL MARKET OB/XF VALUE		3,726
TOTAL LAND VALUE - MARKET		50,000
TOTAL MARKET VALUE		318,664
SOH/AGL Deduction		63,705
ASSESSED VALUE		254,959
TOTAL EXEMPTION VALUE	HX HB	50,000
BASE TAXABLE VALUE		204,959
TOTAL JUST VALUE		318,664
NCON VALUE		0
INCOME VALUE		
PREVIOUS YEAR MKT VALUE		272,865

PERMIT NUM	DESCRIPTION	AMT	ISSUED
C1912410	CO ISSUED	0	03/02/2020
B1912410	NEW CONSTR	275,141	12/04/2019
B1909834	NEW CONSTR	274,491	09/18/2019

SALES DATA

OFF RECORD Number	DATE	TYPE INST	Q U	V I	RSN CD	SALE PRICE
2350/0562	3/25/2020	WD	Q	I	01	270,600
GRANTOR: SEDA CONSTRUCTION COM						
GRANTEE: RICHARDSON WILLIE C						
2315/0103	10/25/2019	WD	U	V	30	48,000
GRANTOR: SEMANIK EQUITY DEVELO						
GRANTEE: SEDA CONSTRUCTION C						

BUILDING NOTES

BUILDING DIMENSIONS

FSP=[YR=2020] W13 PTO=[YR=2020] N1 W10 S7 E10 N6$ S6 BAS=[YR=2020] W25 S51 E4 FOP=[YR=2020] S6 E14 FGR=[YR=2020] S7 E20 N22 W10 N3 W7 FST=[YR=2020] S5 W3 N5 E3$ S5 W3 S13$ N8 W5 S2 W9$ E9 N2 E5 N10 E10 S3 E10 N38 W13 N4$ S4 E13 N10$ PTR=E15 STR=[YR=2020] S4 E4 FUS=[YR=2020] S27 E13 N31 W5 S4 W8$ E8 N4 W12$ W15$.

EXTRA FEATURES

LN	OB/XF CODE	DESCRIPTION	BLD	CAP	L	W	UNITS	UT	Adj R	ADJ UNIT PRICE	ORIG COND	YEAR ON	YEAR ACTUAL	Q	% COND	OB/XF MKT VALUE	NOTES
1	0810	CONCRETE A	0	100	0	0	579.00	SF	6.50	6.50	100	2020	2020	3	99	3,726	

LAND DESCRIPTION

TOTAL OB/XF 3,726

LN	USE CODE	CLS	LAND USE DESCRIPTION	CAP	RD	LOC ZONE	FRONT	DEPTH	TOT LND UTS	UNIT TYPE	DT	DPTH FACT	% COND	TOT ADJ	UNIT PRICE	ADJ UNIT PRICE	LAND VALUE	OTHER ADJUSTMENTS AND NOTES	YEAR	DENSITY	DECL	FRZ	YR	CONSRV
1	000134	C	SFR POND	100			0.00	0.00	1.00	LT		1.00	1.00	1.00	50,000.00	50,000.00	50,000							

REVIEW DATE 03/17/2020 BY NW Total Acres: 0.00 Total Land Value: 50,000 Market: 0 Agricultural: 0 Common: 50,000 PRINTED 08/02/2023 BY SYS