LOT 25
HIDEAWAY PHASE 1B PBK 8/301

DIENER JOHN M & RAINA N
86479 MOONLIT WALK CIR
YULEE, FL 32097

2023

42-2N-27-4373-0025-0000

NASSAU COUNTY PROPERTY

BUILDING CHARACTERISTICS

ELEMENT	CD	CONSTRUCTION
Exterior Wall	05	AVERAGE 100
Roof Structur	03	GABLE/HIP 100
Roof Cover	03	COMP SHNGL 100
Interior Wall	05	DRYWALL 100
Interior Floo	11	CLAY TILE 50
Interior Floo	14	CARPET 50
Air Condition	03	CENTRAL 100
Heating Type	04	AIR DUCTED 100
Bedrooms		4 100
Bathrooms		2.5 100
Frame	02	WOOD FRAME 100
Stories	2.	2. 100
Units		0 100
Occupancy	00	NONE 100
Quality	05	Quality Level 05

DOR CODE	0100	SINGLE FAMILY	
MAP NUM		MKT AREA	04
NEIGHBORHOOD/LOC	4071.0100		

AREA TYPE	TOTAL GROSS AREA	PCT OF BASE	TOT ADJ AREA	SUBAREA MARKET VALUE
BAS	1,650	100	1,650	165,685
FGR	660	55	363	36,451
FOP	55	30	16	1,607
FSP	160	40	64	6,427
FUS	1,156	100	1,156	116,081
PTO	110	5	6	603
STR	48	10	5	502
TOTALS	3,839		3,260	327,354

MARKET ADJUSTMENTS

TYPE	MDL	EFF. AREA	TOT ADJ PTS	EFF. BASE RATE	REPL. COST NEW	AYB	EYB	ECON	FNCT		NORM	% COND
0100	01	3,260	111.8260	100.92	328,999	2020	2020	0	0	0	0.50	99.50

1 SINGLE FAM – 100% - 2021 Heated Area: 2806 HX Base Yr 2021

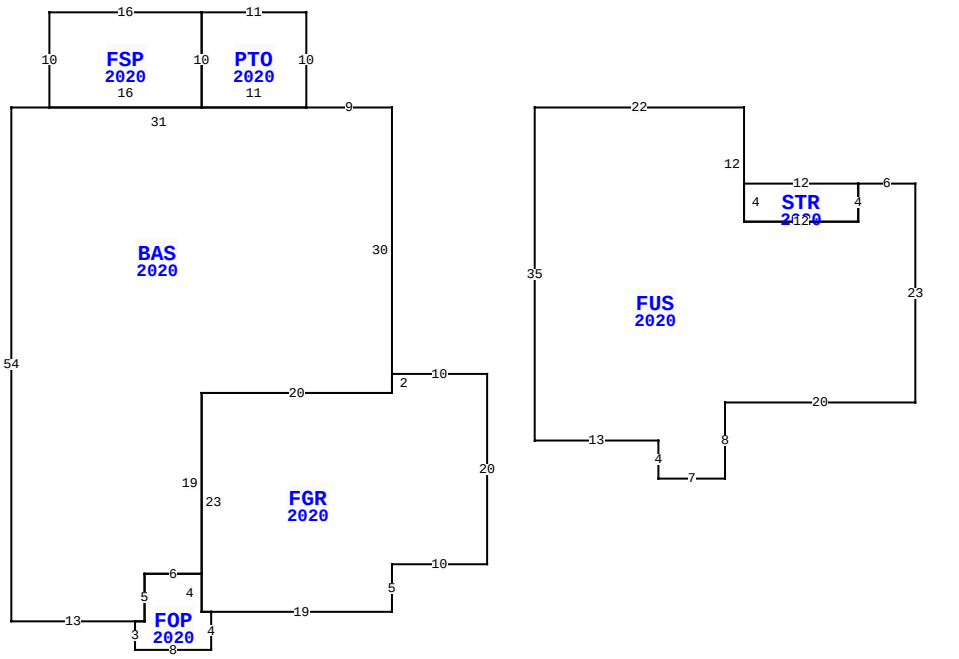

86479 MOONLIT WALK CIR, YULEE

BLD DATE	05/17/2022 NW	LGL DATE	
XF DATE		LAND DATE	
INC DATE		AG DATE	

VALUATION SUMMARY

VALUATION BY		STANDARD
Tax Group: 4	Tax Dist:	
BUILDING MARKET VALUE		327,354
TOTAL MARKET OB/XF VALUE		4,391
TOTAL LAND VALUE - MARKET		50,000
TOTAL MARKET VALUE		381,745
SOH/AGL Deduction		128,951
ASSESSED VALUE		252,794
TOTAL EXEMPTION VALUE	HX HB	50,000
BASE TAXABLE VALUE		202,794
TOTAL JUST VALUE		381,745
NCON VALUE		0
INCOME VALUE		
PREVIOUS YEAR MKT VALUE		325,633

PERMIT NUM	DESCRIPTION	AMT	ISSUED
20001012	NEW CONSTR	379,701	02/10/2020

SALES DATA

OFF RECORD Number	DATE	TYPE INST	Q / U	V / I	RSN CD	SALE PRICE
2372/1166	6/30/2020	WD	Q	I	01	312,400
GRANTOR: SEDA CONSTRUCTION COM						
GRANTEE: DIENER JOHN M & RAI						
2348/0694	3/18/2020	WD	U	V	30	48,000
GRANTOR: SEMANIK EQUITY DEV &						
GRANTEE: SEDA CONSTRUCTION C						

BUILDING NOTES

BUILDING DIMENSIONS

BAS=[YR=2020] W9 PTO=[YR=2020] N10 W11 FSP=[YR=2020] W16 S10 E16 N10$ S10 E11$ W31 S54 E13 FOP=[YR=2020] S3 E8 N4 FGR=[YR=2020] E19 N5 E10 N20 W10 S2 W20 S23 E1$ W1 N4 W6 S5 W1$ E1 N5 E6 N19 E20 N30$ PTR=E15 FUS=[YR=2020] S35 E13 S4 E7 N8 E20 N23 W6 STR=[YR=2020] W12 S4 E12 N4$ S4 W12 N12 W22$ W15$.

EXTRA FEATURES

LN	OB/XF CODE	DESCRIPTION	BLD	CAP	L	W	UNITS	UT	Adj R	ADJ UNIT PRICE	ORIG COND	YEAR ON	YEAR ACTUAL	Q	% COND	OB/XF MKT VALUE	NOTES
1	0811	CONCRETE B	0	100	0	0	853.00	SF	5.20	5.20	100	2020	2020	3	99	4,391	

LAND DESCRIPTION

TOTAL OB/XF 4,391

LN	USE CODE	CLS	LAND USE DESCRIPTION	CAP	RD	LOC ZONE	FRONT	DEPTH	TOT LND UTS	UNIT TYPE	DT	DPTH FACT	% COND	TOT ADJ	UNIT PRICE	ADJ UNIT PRICE	LAND VALUE	OTHER ADJUSTMENTS AND NOTES	YEAR	DENSITY	DECL	FRZ	YR	CONSRV
1	000100	C	SFR	100			0.00	0.00	1.00	LT		1.00	1.00	1.00	50,000.00	50,000.00	50,000							

REVIEW DATE 10/21/2020 BY NW Total Acres: 0.00 Total Land Value: 50,000 Market: 0 Agricultural: 0 Common: 50,000 PRINTED 08/02/2023 BY SYS