LOT 4
HIDEAWAY PHASE 1B PBK 8/301

THOMAS MICHAEL A & JEHAN K
86181 TRANQUIL CT
YULEE, FL 32097

2023

42-2N-27-4373-0004-0000

BUILDING CHARACTERISTICS

ELEMENT	CD	CONSTRUCTION
Exterior Wall	30	VINYL 100
Roof Structur	03	GABLE/HIP 100
Roof Cover	03	COMP SHNGL 100
Interior Wall	05	DRYWALL 100
Interior Floo	14	CARPET 60
Interior Floo	11	CLAY TILE 40
Air Condition	03	CENTRAL 100
Heating Type	04	AIR DUCTED 100
Bedrooms		4 100
Bathrooms		2.5 100
Frame	02	WOOD FRAME 100
Stories	2.	2. 100
Units		0 100
Occupancy	00	NONE 100
Quality	05	Quality Level 05

DOR CODE 0100 SINGLE FAMILY
MAP NUM | MKT AREA 04
NEIGHBORHOOD/LOC 4071.0100

AREA TYPE	TOTAL GROSS AREA	PCT OF BASE	TOT ADJ AREA	SUBAREA MARKET VALUE
BAS	1,650	100	1,650	163,748
FGR	460	55	253	25,108
FOP	55	30	16	1,588
FSP	160	40	64	6,351
FUS	1,156	100	1,156	114,723
STR	48	10	5	497
TOTALS	3,529		3,144	312,015

MARKET ADJUSTMENTS

TYPE	MDL	EFF. AREA	TOT ADJ PTS	EFF. BASE RATE	REPL. COST NEW	AYB	EYB	ECON	FNCT		NORM	% COND
0100	01	3,144	110.5104	99.74	313,583	2020	2020	0	0	0	0.50	99.50

1 SINGLE FAM – 100% - 2021 Heated Area: 2806 HX Base Yr 2021

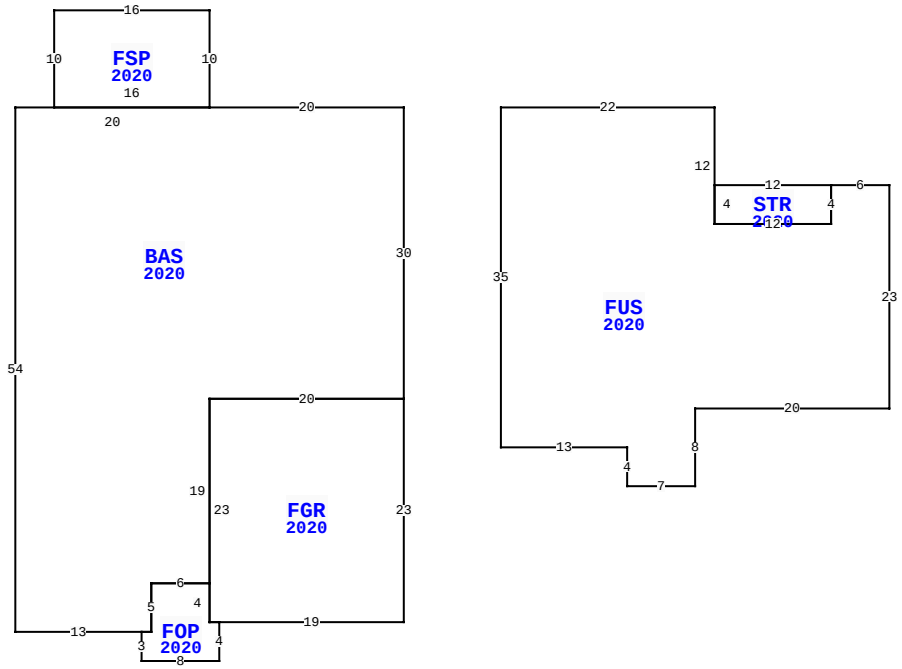

86181 TRANQUIL CT, YULEE

BLD DATE	05/17/2022 NW	LGL DATE	
XF DATE		LAND DATE	
INC DATE		AG DATE	

NASSAU COUNTY PROPERTY

PAGE 1 of 1 4

VALUATION SUMMARY

VALUATION BY		STANDARD
Tax Group: 4	Tax Dist:	
BUILDING MARKET VALUE		312,015
TOTAL MARKET OB/XF VALUE		3,784
TOTAL LAND VALUE - MARKET		50,000
TOTAL MARKET VALUE		365,799
SOH/AGL Deduction		74,908
ASSESSED VALUE		290,891
TOTAL EXEMPTION VALUE	HX HB	50,000
BASE TAXABLE VALUE		240,891
TOTAL JUST VALUE		365,799
NCON VALUE		0
INCOME VALUE		
PREVIOUS YEAR MKT VALUE		312,284

PERMIT NUM	DESCRIPTION	AMT	ISSUED
20000878	NEW CONSTR	369,655	02/04/2020

SALES DATA

OFF RECORD Number	DATE	TYPE INST	Q / U	V / I	RSN CD	SALE PRICE
2371/0263	6/24/2020	WD	Q	I	01	293,200
GRANTOR: SEDA CONSTRUCTION COM						
GRANTEE: THOMAS MICHAEL A &						
2267/1470	4/10/2019	WD	U	V	30	192,000
GRANTOR: SEMANIK EQUITY DEVELO						
GRANTEE: SEDA CONSTRUCTION C						

BUILDING NOTES

BUILDING DIMENSIONS

BAS=[YR=2020] W20 FSP=[YR=2020] N10 W16 S10 E16$ W20 S54 E13 FOP=[YR=2020] S3 E8 N4 FGR=[YR=2020] E19 N23 W20 S23 E1$ W1 N4 W6 S5 W1$ E1 N5 E6 N19 E20 N30$ PTR=E10 FUS=[YR=2020] S35 E13 S4 E7 N8 E20 N23 W6 STR=[YR=2020] W12 S4 E12 N4$ S4 W12 N12 W22$ W10$.

EXTRA FEATURES

LN	OB/XF CODE	DESCRIPTION	BLD	CAP	L	W	UNITS	UT	Adj R	ADJ UNIT PRICE	ORIG COND	YEAR ON	YEAR ACTUAL	Q	% COND	OB/XF MKT VALUE	NOTES
1	0810	CONCRETE A	0	100	0	0	588.00	SF	6.50	6.50	100	2020	2020	3	99	3,784	

LAND DESCRIPTION

TOTAL OB/XF 3,784

LN	USE CODE	CLS	LAND USE DESCRIPTION	CAP	RD	LOC ZONE	FRONT	DEPTH	TOT LND UTS	UNIT TYPE	DT	DPTH FACT	% COND	TOT ADJ	UNIT PRICE	ADJ UNIT PRICE	LAND VALUE	OTHER ADJUSTMENTS AND NOTES	YEAR	DENSITY	DECL	FRZ	YR	CONSRV
1	000100	C	SFR	100			0.00	0.00	1.00	LT		1.00	1.00	1.00	50,000.00	50,000.00	50,000							

REVIEW DATE 10/21/2020 BY NW Total Acres: 0.00 Total Land Value: 50,000 Market: 0 Agricultural: 0 Common: 50,000 PRINTED 08/02/2023 BY SYS