LOT 250
IN OR 1331/1373
HICKORY VILLAGE #1 PB 6/369

HOYT BETH A
86109 SAND HICKORY TRAIL
YULEE, FL 32097

2023

42-2N-27-435H-0250-0000

NASSAU COUNTY PROPERTY

BUILDING CHARACTERISTICS

ELEMENT	CD	CONSTRUCTION
Exterior Wall	10	ABOVE AVG 70
Exterior Wall	16	WD FR STUC 30
Roof Structur	03	GABLE/HIP 100
Roof Cover	03	COMP SHNGL 100
Interior Wall	05	DRYWALL 100
Interior Floo	14	CARPET 80
Interior Floo	08	SHT VINYL 20
Air Condition	03	CENTRAL 100
Heating Type	04	AIR DUCTED 100
Bedrooms		5 100
Bathrooms		3 100
Frame	02	WOOD FRAME 100
Stories	1.5	1.5 100
Units		0 100
Occupancy	00	NONE 100
Quality	06	Quality Level 06
DOR CODE	0100	SINGLE FAMILY
MAP NUM		MKT AREA 04
NEIGHBORHOOD/LOC	4047.00	

AREA TYPE	TOTAL GROSS AREA	PCT OF BASE	TOT ADJ AREA	SUBAREA MARKET VALUE
BAS	1,951	100	1,951	198,195
FGR	551	55	303	30,781
FOP	37	30	11	1,118
FOP	120	30	36	3,657
FUS	418	100	418	42,463
STR	59	10	6	610
TOTALS	3,136		2,725	276,822

MARKET ADJUSTMENTS

TYPE	MDL	EFF. AREA	TOT ADJ PTS	EFF. BASE RATE	REPL. COST NEW	AYB	EYB	ECON	FNCT		NORM	% COND
0100	01	2,725	122.5440	110.60	301,385	2005	2005	0	0	0	8.15	91.85

1 SINGLE FAM – 100% - 2006 Heated Area: 2369 HX Base Yr 2006

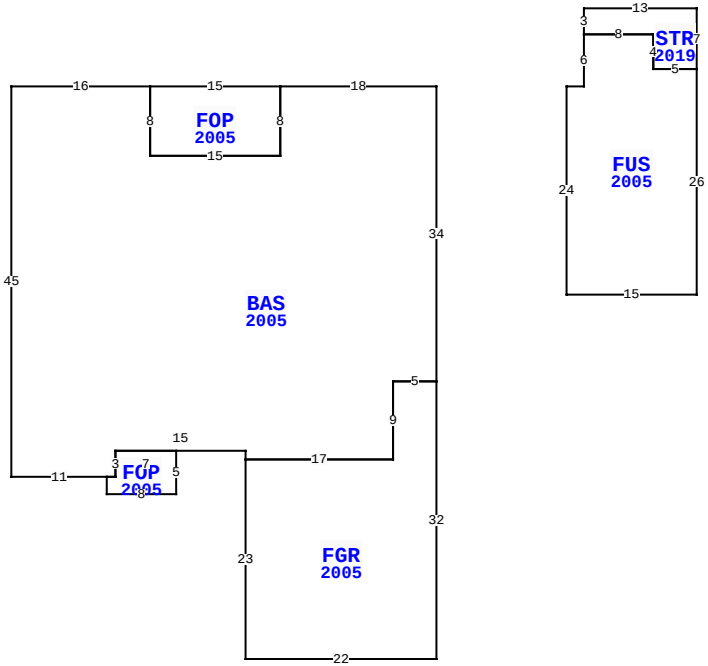

86109 SAND HICKORY TRL, YULEE

BLD DATE	03/14/2023 NW	LGL DATE	
XF DATE		LAND DATE	
INC DATE		AG DATE	

VALUATION SUMMARY

VALUATION BY		STANDARD
Tax Group: 4	Tax Dist:	
BUILDING MARKET VALUE		276,822
TOTAL MARKET OB/XF VALUE		3,646
TOTAL LAND VALUE - MARKET		55,000
TOTAL MARKET VALUE		335,468
SOH/AGL Deduction		157,125
ASSESSED VALUE		178,343
TOTAL EXEMPTION VALUE	HX HB	50,000
BASE TAXABLE VALUE		128,343
TOTAL JUST VALUE		335,468
NCON VALUE		0
INCOME VALUE		
PREVIOUS YEAR MKT VALUE		273,985

PERMIT NUM	DESCRIPTION	AMT	ISSUED
M09315	MECH OTHER	0	02/01/2005
E0514131	ELEC OTHER	2,000	02/01/2005
P0508923	OTHER	0	02/01/2005
B0414105	NEW CONSTR	195,225	11/01/2004
R046902	REPAIR/RRF	1,500	11/01/2004

SALES DATA

OFF RECORD Number	DATE	TYPE INST	Q / U	V / I	RSN CD	SALE PRICE
1331/1373	7/08/2005	WD	Q	I		195,300
GRANTOR: MATTAMY (JACKSONVILLE						
GRANTEE: HOYT BETH A						
1274/1081	11/17/2004	WD	U	V	19	950,400
GRANTOR: MARSH CREEK DEVELOPME						
GRANTEE: MATTAMY (JAX) PARTN						

BUILDING NOTES

BUILDING DIMENSIONS

BAS=[YR=2005] W18 FOP=[YR=2005] W15 S8 E15 N8$ S8 W15 N8 W16 S45 E11 FOP=[YR=2005] S2 E8 N5 W7 S3 W1$ E1 N3 E15 S1 FGR=[YR=2005] S23 E22 N32 W5 S9 W17$ E17 N9 E5 N34$ PTR= E15 FUS=[YR=2005] E2 N6 STR=[YR=2019] N3 E13 S7 W5 N4 W8$ E8 S4 E5 S26 W15 N24$ W15$.

EXTRA FEATURES

LN	OB/XF CODE	DESCRIPTION	BLD	CAP	L	W	UNITS	UT	Adj R	ADJ UNIT PRICE	ORIG COND	YEAR ON	YEAR ACTUAL	Q	% COND	OB/XF MKT VALUE	NOTES
1	0811	CONCRETE B	0	100	0	0	806.00	SF	5.20	5.20	100	2005	2005	3	87	3,646	

LAND DESCRIPTION

TOTAL OB/XF 3,646

LN	USE CODE	CLS	LAND USE DESCRIPTION	CAP	RD	LOC ZONE	FRONT	DEPTH	TOT LND UTS	UNIT TYPE	DT	DPTH FACT	% COND	TOT ADJ	UNIT PRICE	ADJ UNIT PRICE	LAND VALUE	OTHER ADJUSTMENTS AND NOTES	YEAR	DENSITY	DECL	FRZ	YR	CONSRV
1	000100	C	SFR	100		RS-2	0.00	0.00	1.00	LT		1.00	1.00	1.00	55,000.00	55,000.00	55,000							

REVIEW DATE 09/14/2018 BY SBX Total Acres: 0.00 Total Land Value: 55,000 Market: 0 Agricultural: 0 Common: 55,000 PRINTED 08/02/2023 BY SYS