LOT 247
HICKORY VILLAGE #2 PB 7/120

IVANOVIC FAMILY TRUST/IVANOVIC NICOLA TRUSTEE
86131 SAND HICKORY TRAIL
YULEE, FL 32097

2023

42-2N-27-435H-0247-0000

BUILDING CHARACTERISTICS

ELEMENT	CD	CONSTRUCTION
Exterior Wall	10	ABOVE AVG 70
Exterior Wall	16	WD FR STUC 30
Roof Structur	03	GABLE/HIP 100
Roof Cover	03	COMP SHNGL 100
Interior Wall	05	DRYWALL 100
Interior Floo	14	CARPET 70
Interior Floo	08	SHT VINYL 30
Air Condition	03	CENTRAL 100
Heating Type	04	AIR DUCTED 100
Bedrooms		3 100
Bathrooms		2 100
Frame	02	WOOD FRAME 100
Stories	1.	1. 100
Units		0 100
Occupancy	00	NONE 100
Quality	06	Quality Level 06
DOR CODE	0100	SINGLE FAMILY
MAP NUM		MKT AREA 04
NEIGHBORHOOD/LOC	4047.00	

AREA TYPE	TOTAL GROSS AREA	PCT OF BASE	TOT ADJ AREA	SUBAREA MARKET VALUE
BAS	1,772	100	1,772	181,433
FGR	440	55	242	24,778
FOP	61	30	18	1,843
FOP	210	30	63	6,451
TOTALS	2,483		2,095	214,504

MARKET ADJUSTMENTS

TYPE	MDL	EFF. AREA	TOT ADJ PTS	EFF. BASE RATE	REPL. COST NEW	AYB	EYB	ECON	FNCT		NORM	% COND
0100	01	2,095	122.8430	110.87	232,273	2006	2006	0	0	0	7.65	92.35

1 SINGLE FAM – 100% - 2007 Heated Area: 1772 HX Base Yr 2007

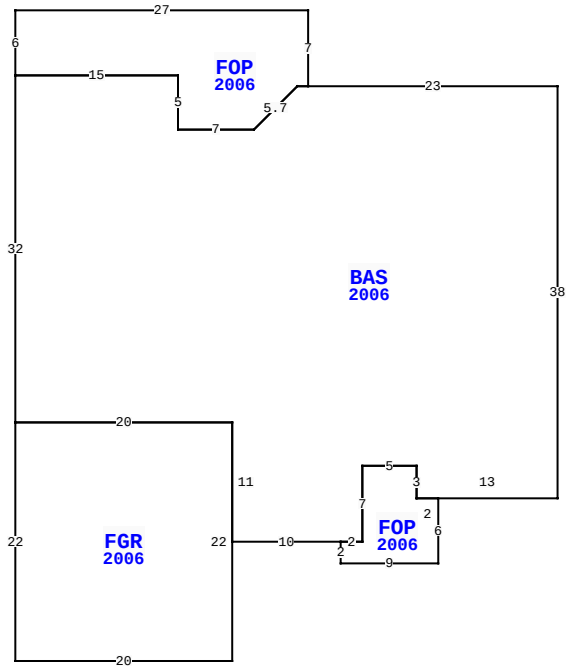

86131 SAND HICKORY TRL, YULEE

BLD DATE	03/14/2023 NW	LGL DATE	
XF DATE		LAND DATE	
INC DATE		AG DATE	

NASSAU COUNTY PROPERTY

PAGE 1 of 1 4

VALUATION SUMMARY

VALUATION BY		STANDARD
Tax Group: 4	Tax Dist:	
BUILDING MARKET VALUE		214,504
TOTAL MARKET OB/XF VALUE		5,255
TOTAL LAND VALUE - MARKET		55,000
TOTAL MARKET VALUE		274,759
SOH/AGL Deduction		124,968
ASSESSED VALUE		149,791
TOTAL EXEMPTION VALUE	HX HB VX	55,000
BASE TAXABLE VALUE		94,791
TOTAL JUST VALUE		274,759
NCON VALUE		0
INCOME VALUE		
PREVIOUS YEAR MKT VALUE		226,730

PERMIT NUM	DESCRIPTION	AMT	ISSUED
M11436	MECH OTHER	0	04/01/2006
C0516790	CO ISSUED	134,092	11/01/2005
B0516555	FOUNDATION	3,500	11/01/2005
B0516790	NEW CONSTR	134,092	11/01/2005

SALES DATA

OFF RECORD Number	DATE	TYPE INST	Q / U	V / I	RSN CD	SALE PRICE
2638/1609	3/29/2023	WD	U	I	11	100
GRANTOR: IVANOVIC NICOLA & SIG						
GRANTEE: IVANOVIC FAMILY TRU						
1448/1402	10/02/2006	WD	Q	I		231,600
GRANTOR: COPPENBARGER HOMES						
GRANTEE: IVANOVIC NICOLA & S						

BUILDING NOTES

BUILDING DIMENSIONS

BAS=[YR=2006] W23 FOP=[YR=2006] N7 W27 S6 E15 S5 E7 R4 U4 E1$ W1 D4 L4 W7 N5 W15 S32 FGR=[YR=2006] S22 E20 N22 W20$ E20 S11 E10 FOP=[YR=2006] S2 E9 N6 W2 N3 W5 S7 W2$ E2 N7 E5 S3 E13 N38$.

EXTRA FEATURES

LN	OB/XF CODE	DESCRIPTION	BLD	CAP	L	W	UNITS	UT	Adj R	ADJ UNIT PRICE	ORIG COND	YEAR ON	YEAR ACTUAL	Q	% COND	OB/XF MKT VALUE	NOTES
1	0811	CONCRETE B	0	100	0	0	657.00	SF	5.20	5.20	100	2006	2006	3	88	3,006	
2	0855	CONC PAVER	0	100	0	0	84.00	SF	10.00	10.00	100	2006	2006	3	88	739	
3	0479	VF PICKET	0	100	0	0	174.00	LF	10.00	10.00	100	2007	2007	3	74	1,288	
4	0470	VNYL GATE	0	100	0	0	2.00	UT	150.00	150.00	100	2007	2007	3	74	222	

LAND DESCRIPTION

TOTAL OB/XF 5,255

LN	USE CODE	CLS	LAND USE DESCRIPTION	CAP	RD	LOC ZONE	FRONT	DEPTH	TOT LND UTS	UNIT TYPE	DT	DPTH FACT	% COND	TOT ADJ	UNIT PRICE	ADJ UNIT PRICE	LAND VALUE	OTHER ADJUSTMENTS AND NOTES	YEAR	DENSITY	DECL	FRZ	YR	CONSRV
1	000100	C	SFR	100		RS-2	0.00	0.00	1.00	LT		1.00	1.00	1.00	55,000.00	55,000.00	55,000							

REVIEW DATE 09/14/2018 BY SBX Total Acres: 0.00 Total Land Value: 55,000 Market: 0 Agricultural: 0 Common: 55,000 PRINTED 08/02/2023 BY SYS