LOT 234
HICKORY VILLAGE #4 PB 7/122

**LEONARDI JUNE**
86237 SAND HICKORY TRAIL
YULEE, FL 32097

# 2023

**42-2N-27-435H-0234-0000**

## NASSAU COUNTY PROPERTY



## BUILDING CHARACTERISTICS

| ELEMENT | CD | CONSTRUCTION |
|---|---|---|
| Exterior Wall | 16 | WD FR STUC 100 |
| Roof Structur | 03 | GABLE/HIP 100 |
| Roof Cover | 03 | COMP SHNGL 100 |
| Interior Wall | 05 | DRYWALL 100 |
| Interior Floo | 13 | LVT/LAMNT 50 |
| Interior Floo | 14 | CARPET 50 |
| Air Condition | 03 | CENTRAL 100 |
| Heating Type | 04 | AIR DUCTED 100 |
| Bedrooms | | 4 100 |
| Bathrooms | | 2.5 100 |
| Frame | 02 | WOOD FRAME 100 |
| Stories | 1.5 | 1.5 100 |
| Units | | 0 100 |
| Occupancy | 00 | NONE 100 |
| Quality | 06 | Quality Level 06 |

| | | | |
|---|---|---|---|
| DOR CODE | 0100 | SINGLE FAMILY | |
| MAP NUM | | MKT AREA | 04 |
| NEIGHBORHOOD/LOC | 4047.00 | | |

| AREA TYPE | TOTAL GROSS AREA | PCT OF BASE | TOT ADJ AREA | SUBAREA MARKET VALUE |
|---|---|---|---|---|
| BAS | 1,566 | 100 | 1,566 | 156,463 |
| FGR | 396 | 55 | 218 | 21,781 |
| FOP | 86 | 30 | 26 | 2,598 |
| FOP | 170 | 30 | 51 | 5,096 |
| FUS | 870 | 100 | 870 | 86,923 |
| TOTALS | 3,088 | | 2,731 | 272,860 |

## MARKET ADJUSTMENTS

| TYPE | MDL | EFF. AREA | TOT ADJ PTS | EFF. BASE RATE | REPL. COST NEW | AYB | EYB | ECON | FNCT | | NORM | % COND |
|---|---|---|---|---|---|---|---|---|---|---|---|---|
| 0100 | 01 | 2,731 | 120.3360 | 108.60 | 296,587 | 2006 | 2006 | 0 | 0 | 0 | 8.00 | 92.00 |

1 SINGLE FAM – 0% - 2023 Heated Area: 2436 HX Base Yr

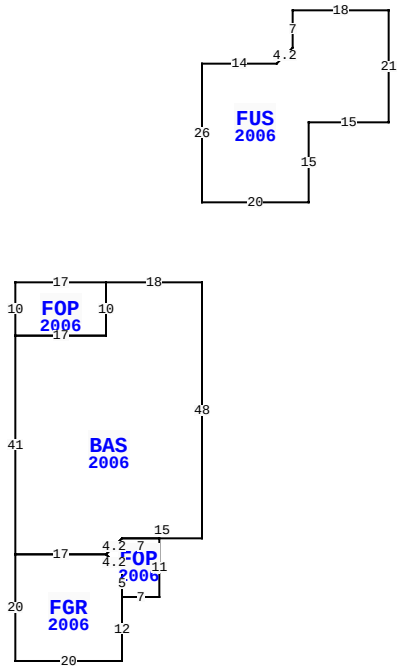


86237 SAND HICKORY TRL, YULEE

| | | | |
|---|---|---|---|
| BLD DATE | 03/14/2023 NW | LGL DATE | |
| XF DATE | | LAND DATE | |
| INC DATE | | AG DATE | |

## NASSAU COUNTY PROPERTY — VALUATION SUMMARY

| | |
|---|---|
| VALUATION BY | STANDARD |
| Tax Group: 4 | Tax Dist: |
| BUILDING MARKET VALUE | 272,860 |
| TOTAL MARKET OB/XF VALUE | 41,224 |
| TOTAL LAND VALUE - MARKET | 55,000 |
| TOTAL MARKET VALUE | 369,084 |
| SOH/AGL Deduction | 0 |
| ASSESSED VALUE | 369,084 |
| TOTAL EXEMPTION VALUE | 0 |
| BASE TAXABLE VALUE | 369,084 |
| TOTAL JUST VALUE | 369,084 |
| NCON VALUE | 0 |
| INCOME VALUE | |
| PREVIOUS YEAR MKT VALUE | 298,117 |

| PERMIT NUM | DESCRIPTION | AMT | ISSUED |
|---|---|---|---|
| E25371 | ELEC OTHER | 0 | 08/01/2012 |
| B26058 | SWIM POOL | 33,972 | 05/01/2012 |
| C0516333 | CO ISSUED | 0 | 11/01/2005 |
| B0516333 | NEW CONSTR | 0 | 11/01/2005 |

## SALES DATA

| OFF RECORD Number | DATE | TYPE INST | Q U | V I | RSN CD | SALE PRICE |
|---|---|---|---|---|---|---|
| 2584/0185 | 8/15/2022 | WD | Q | I | 01 | 435,900 |
| GRANTOR: LEMOND BRANDY C & BRE | | | | | | |
| GRANTEE: LEONARDI JUNE | | | | | | |
| 2291/0873 | 7/19/2019 | WD | Q | I | 01 | 263,000 |
| GRANTOR: GARRETT JUSTIN CLAY | | | | | | |
| GRANTEE: LEMOND BRANDY C & B | | | | | | |

## BUILDING NOTES

## BUILDING DIMENSIONS

BAS=[YR=2006] W18 FOP=[YR=2006] W17 S10 E17 N10$ S10 W17 S41
FGR=[YR=2006] S20 E20 N12 FOP=[YR=2006] E7 N11 W7 L3 D3
D3 R3 S5$ N5 L3 U3 W17$ E17 U3 R3 E15 N48$ PTR= N15
FUS=[YR=2006] N26 E14 R3 U3 N7 E18 S21 W15 S15 W20$ S15$.

## EXTRA FEATURES

| LN | OB/XF CODE | DESCRIPTION | BLD | CAP | L | W | UNITS | UT | Adj R | ADJ UNIT PRICE | ORIG COND | YEAR ON | YEAR ACTUAL | Q | % COND | OB/XF MKT VALUE | NOTES |
|---|---|---|---|---|---|---|---|---|---|---|---|---|---|---|---|---|---|
| 1 | 0504 | FP-ELECTRI | 0 | 0 | 0 | 0 | 1.00 | UT | 2,000.00 | 2,000.00 | 100 | 2006 | 2006 | 3 | 91 | 1,820 | |
| 2 | 0812 | CONCRETE C | 0 | 0 | 0 | 0 | 2,094.00 | SF | 4.00 | 4.00 | 100 | 2006 | 2006 | 3 | 88 | 7,371 | |
| 3 | 0861 | POOL GUNIT | 0 | 0 | 0 | 0 | 482.00 | SF | 85.00 | 85.00 | 100 | 2012 | 2012 | 3 | 71 | 29,089 | |
| 4 | 0845 | KOOL DECK | 0 | 0 | 0 | 0 | 432.00 | SF | 7.25 | 7.25 | 100 | 2012 | 2012 | 3 | 94 | 2,944 | |

## LAND DESCRIPTION

TOTAL OB/XF 41,224

| LN | USE CODE | CLS | LAND USE DESCRIPTION | CAP | RD | LOC ZONE | FRONT | DEPTH | TOT LND UTS | UNIT TYPE | DT | DPTH FACT | % COND | TOT ADJ | UNIT PRICE | ADJ UNIT PRICE | LAND VALUE | OTHER ADJUSTMENTS AND NOTES | YEAR | DENSITY | DECL | FRZ | YR | CONSRV |
|---|---|---|---|---|---|---|---|---|---|---|---|---|---|---|---|---|---|---|---|---|---|---|---|---|
| 1 | 000100 | C | SFR | 0 | | RS-2 | 0.00 | 0.00 | 1.00 | LT | | 1.00 | 1.00 | 1.00 | 55,000.00 | 55,000.00 | 55,000 | | | | | | | |

REVIEW DATE 09/18/2018 BY SB Total Acres: 0.00 Total Land Value: 55,000 Market: 0 Agricultural: 0 Common: 55,000 PRINTED 08/02/2023 BY SYS