LOT 164
IN OR 2094/1150
HICKORY VILLAGE #2 PB 7/120

HAIGHT JAMES ALAN
86011 EVERGREEN PL
YULEE, FL 32097

2023

42-2N-27-435H-0164-0000

NASSAU COUNTY PROPERTY

BUILDING CHARACTERISTICS

ELEMENT	CD	CONSTRUCTION
Exterior Wall	10	ABOVE AVG 70
Exterior Wall	16	WD FR STUC 30
Roof Structur	03	GABLE/HIP 100
Roof Cover	03	COMP SHNGL 100
Interior Wall	05	DRYWALL 100
Interior Floo	14	CARPET 80
Interior Floo	08	SHT VINYL 20
Air Condition	03	CENTRAL 100
Heating Type	04	AIR DUCTED 100
Bedrooms		5 100
Bathrooms		3 100
Frame	02	WOOD FRAME 100
Stories	1.5	1.5 100
Units		0 100
Occupancy	00	NONE 100
Quality	06	Quality Level 06
DOR CODE	0100	SINGLE FAMILY
MAP NUM		MKT AREA 04
NEIGHBORHOOD/LOC	4047.00	

AREA TYPE	TOTAL GROSS AREA	PCT OF BASE	TOT ADJ AREA	SUBAREA MARKET VALUE
BAS	1,951	100	1,951	202,510
FGR	551	55	303	31,451
FOP	37	30	11	1,142
FOP	120	30	36	3,737
FUS	418	100	418	43,388
STP	12	10	1	104
STR	59	10	6	623
TOTALS	3,148		2,726	282,954

MARKET ADJUSTMENTS

TYPE	MDL	EFF. AREA	TOT ADJ PTS	EFF. BASE RATE	REPL. COST NEW	AYB	EYB	ECON	FNCT		NORM	% COND
0100	01	2,726	122.5440	110.60	301,496	2006	2009	0	0	0	6.15	93.85

1 SINGLE FAM – 100% - 2018 Heated Area: 2369 HX Base Yr 2018

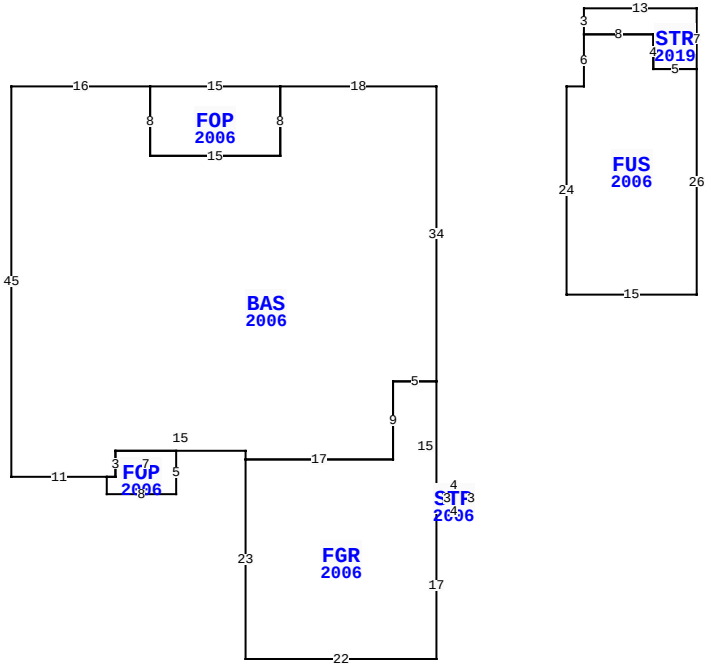

86011 EVERGREEN PL, YULEE

BLD DATE	03/14/2023 NW	LGL DATE	
XF DATE		LAND DATE	
INC DATE		AG DATE	

NASSAU COUNTY PROPERTY — VALUATION SUMMARY

VALUATION BY		STANDARD
Tax Group: 4	Tax Dist:	
BUILDING MARKET VALUE		282,954
TOTAL MARKET OB/XF VALUE		46,742
TOTAL LAND VALUE - MARKET		55,000
TOTAL MARKET VALUE		384,696
SOH/AGL Deduction		111,058
ASSESSED VALUE		273,638
TOTAL EXEMPTION VALUE	HX HB	50,000
BASE TAXABLE VALUE		223,638
TOTAL JUST VALUE		384,696
NCON VALUE		39,690
INCOME VALUE		
PREVIOUS YEAR MKT VALUE		279,594

PERMIT NUM	DESCRIPTION	AMT	ISSUED
21007498	SWIM POOL	35,100	06/09/2021
20012274	REMODEL	0	12/09/2020
C0516334	CO ISSUED	0	11/01/2005
B0516334	NEW CONSTR	0	11/01/2005

SALES DATA

OFF RECORD Number	DATE	TYPE INST	Q / U	V / I	RSN CD	SALE PRICE
2094/1150	1/04/2017	QC	U	I	11	100
GRANTOR: HAIGHT PHYLLIS & DONA						
GRANTEE: HAIGHT JAMES ALAN						
1895/1398	12/19/2013	WD	U	I	30	100
GRANTOR: HAIGHT DONALD & PHYLL						
GRANTEE: HAIGHT DONALD & PHY						

BUILDING NOTES

BUILDING DIMENSIONS

BAS=[YR=2006] W18 FOP=[YR=2006] W15 S8 E15 N8$ S8 W15 N8 W16 S45 E11 FOP=[YR=2006] S2 E8 N5 W7 S3 W1$ E1 N3 E15 S1 FGR=[YR=2006] S23 E22 N17 STP=[YR=2006] E4N3 W4 S3$ N15 W5 S9 W17$ E17 N9 E5 N34$ PTR=E15 FUS=[YR=2006] E2 N6 STR=[YR=2019] N3 E13 S7 W5 N4 W8$ E8 S4 E5 S26 W15 N24$ W15$.

EXTRA FEATURES

LN	OB/XF CODE	DESCRIPTION	BLD	CAP	L	W	UNITS	UT	Adj R	ADJ UNIT PRICE	ORIG COND	YEAR ON	YEAR ACTUAL	Q	% COND	OB/XF MKT VALUE	NOTES
1	0811	CONCRETE B	0	100	0	0	845.00	SF	5.20	5.20	100	2006	2006	3	88	3,867	
2	0500	FP-PRE FAB	0	100	0	0	1.00	UT	3,500.00	3,500.00	100	2006	2006	3	91	3,185	
3	0861	POOL GUNIT	0	100	26	13	338.00	SF	85.00	85.00	100	2022	2022	3	100	28,730	
4	0855	CONC PAVER	0	100	0	0	1,096.00	SF	10.00	10.00	100	2022	2022	3	100	10,960	

LAND DESCRIPTION

TOTAL OB/XF 46,742

LN	USE CODE	CLS	LAND USE DESCRIPTION	CAP	RD	LOC ZONE	FRONT	DEPTH	TOT LND UTS	UNIT TYPE	DT	DPTH FACT	% COND	TOT ADJ	UNIT PRICE	ADJ UNIT PRICE	LAND VALUE	OTHER ADJUSTMENTS AND NOTES	YEAR	DENSITY	DECL	FRZ	YR	CONSRV
1	000100	C	SFR	100		RS-2	0.00	0.00	1.00	LT		1.00	1.00	1.00	55,000.00	55,000.00	55,000							

REVIEW DATE 12/21/2022 BY NW Total Acres: 0.00 Total Land Value: 55,000 Market: 0 Agricultural: 0 Common: 55,000 PRINTED 08/02/2023 BY SYS