LOT 115
IN OR 1463/978
HICKORY VILLAGE #3 PB 6/372

LIPPE DEBORAH
86034 KNOTTED OAK WAY
YULEE, FL 32097

**2023**

**42-2N-27-435H-0115-0000**

## BUILDING CHARACTERISTICS

| ELEMENT | CD | CONSTRUCTION |
|---|---|---|
| Exterior Wall | 10 | ABOVE AVG 70 |
| Exterior Wall | 16 | WD FR STUC 30 |
| Roof Structur | 03 | GABLE/HIP 100 |
| Roof Cover | 03 | COMP SHNGL 100 |
| Interior Wall | 05 | DRYWALL 100 |
| Interior Floo | 14 | CARPET 80 |
| Interior Floo | 08 | SHT VINYL 20 |
| Air Condition | 03 | CENTRAL 100 |
| Heating Type | 04 | AIR DUCTED 100 |
| Bedrooms | | 4 100 |
| Bathrooms | | 3 100 |
| Frame | 02 | WOOD FRAME 100 |
| Stories | 1. | 1. 100 |
| Units | | 0 100 |
| Occupancy | 00 | NONE 100 |
| Quality | 06 | Quality Level 06 |
| DOR CODE | 0100 | SINGLE FAMILY |
| MAP NUM | | MKT AREA 04 |
| NEIGHBORHOOD/LOC | 4047.00 | |

| AREA TYPE | TOTAL GROSS AREA | PCT OF BASE | TOT ADJ AREA | SUBAREA MARKET VALUE |
|---|---|---|---|---|
| BAS | 251 | 100 | 251 | 24,382 |
| BAS | 2,186 | 100 | 2,186 | 212,351 |
| FGR | 241 | 55 | 133 | 12,920 |
| FGR | 440 | 55 | 242 | 23,508 |
| FOP | 36 | 30 | 11 | 1,069 |
| FOP | 36 | 30 | 11 | 1,069 |
| FOP | 410 | 30 | 123 | 11,949 |
| UOP | 70 | 20 | 14 | 1,360 |
| TOTALS | 3,670 | | 2,971 | 288,608 |

## MARKET ADJUSTMENTS

| TYPE | MDL | EFF. AREA | TOT ADJ PTS | EFF. BASE RATE | REPL. COST NEW | AYB | EYB | ECON | FNCT | | NORM | % COND |
|---|---|---|---|---|---|---|---|---|---|---|---|---|
| 0100 | 01 | 2,971 | 117.8290 | 106.34 | 315,936 | 2004 | 2004 | 0 | 0 | 0 | 8.65 | 91.35 |

1 SINGLE FAM – 100% - 2007 Heated Area: 2437 HX Base Yr 2007

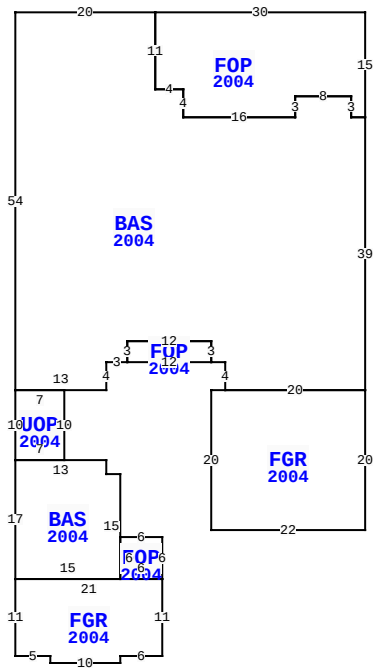


86034 KNOTTED OAK WAY, YULEE

| | | | |
|---|---|---|---|
| BLD DATE | 03/14/2023 NW | LGL DATE | |
| XF DATE | | LAND DATE | |
| INC DATE | | AG DATE | |

## NASSAU COUNTY PROPERTY

PAGE 1 of 1 4

### VALUATION SUMMARY

| | | |
|---|---|---|
| VALUATION BY | | STANDARD |
| Tax Group: 4 | Tax Dist: | |
| BUILDING MARKET VALUE | | 288,608 |
| TOTAL MARKET OB/XF VALUE | | 4,726 |
| TOTAL LAND VALUE - MARKET | | 55,000 |
| TOTAL MARKET VALUE | | 348,334 |
| SOH/AGL Deduction | | 162,147 |
| ASSESSED VALUE | | 186,187 |
| TOTAL EXEMPTION VALUE | HX HB WX | 55,000 |
| BASE TAXABLE VALUE | | 131,187 |
| TOTAL JUST VALUE | | 348,334 |
| NCON VALUE | | 0 |
| INCOME VALUE | | |
| PREVIOUS YEAR MKT VALUE | | 284,106 |

| PERMIT NUM | DESCRIPTION | AMT | ISSUED |
|---|---|---|---|
| 21004628 | SOLAR | 26,595 | 04/14/2021 |

## SALES DATA

| OFF RECORD Number | DATE | TYPE INST | Q U | V I | RSN CD | SALE PRICE |
|---|---|---|---|---|---|---|
| 1463/0978 | 12/05/2006 | WD | Q | I | | 319,000 |
| GRANTOR: SALDANA FRANCISCO & C | | | | | | |
| GRANTEE: LIPPE DEBORAH & FRA | | | | | | |
| 1257/1083 | 9/08/2004 | WD | Q | I | | 245,900 |
| GRANTOR: COPPENBARGER HOMES | | | | | | |
| GRANTEE: SALDANA FRANCISCO & | | | | | | |

## BUILDING NOTES

## BUILDING DIMENSIONS

FOP=[YR=2004] W30 BAS=[YR=2004] W20 S54 UOP=[YR=2004] S10
BAS=[YR=2004] S17 FGR=[YR=2004] S11 E5 S1 E10 N1 E6 N11
FOP=[YR=2004] N6 W6 S6 E6$ W21$ E15 N15 W2 N2 W13$ E7 N10 W7$
E13 N4 E3 FOP=[YR=2004] E12 N3 W12 S3$ N3 E12 S3 E2 S4
FGR=[YR=2004] W2 S20 E22 N20 W20$ E20 N39 W2 N3 W8 S3 W16 N4
W4 N11$ S11 E4 S4 E16 N3 E8 S3 E2 N15$ .

## EXTRA FEATURES

| LN | OB/XF CODE | DESCRIPTION | BLD | CAP | L | W | UNITS | UT | Adj R | ADJ UNIT PRICE | ORIG COND | YEAR ON | YEAR ACTUAL | Q | % COND | OB/XF MKT VALUE | NOTES |
|---|---|---|---|---|---|---|---|---|---|---|---|---|---|---|---|---|---|
| 1 | 0855 | CONC PAVER | 0 | 100 | 26 | 4 | 104.00 | SF | 10.00 | 10.00 | 100 | 2004 | 2004 | 3 | 86 | 894 | |
| 2 | 0812 | CONCRETE C | 0 | 100 | 0 | 0 | 1,114.00 | SF | 4.00 | 4.00 | 100 | 2004 | 2004 | 3 | 86 | 3,832 | |

## LAND DESCRIPTION

TOTAL OB/XF 4,726

| LN | USE CODE | CLS | LAND USE DESCRIPTION | CAP | RD | LOC ZONE | FRONT | DEPTH | TOT LND UTS | UNIT TYPE | DT | DPTH FACT | % COND | TOT ADJ | UNIT PRICE | ADJ UNIT PRICE | LAND VALUE | OTHER ADJUSTMENTS AND NOTES | YEAR | DENSITY | DECL | FRZ | YR | CONSRV |
|---|---|---|---|---|---|---|---|---|---|---|---|---|---|---|---|---|---|---|---|---|---|---|---|---|
| 1 | 000100 | C | SFR | 100 | | RS-2 | 0.00 | 0.00 | 1.00 | LT | | 1.00 | 1.00 | 1.00 | 55,000.00 | 55,000.00 | 55,000 | | | | | | | |

REVIEW DATE 06/08/2018 BY SBX Total Acres: 0.00 Total Land Value: 55,000 Market: 0 Agricultural: 0 Common: 55,000 PRINTED 08/02/2023 BY SYS