LOT 113
IN OR 1983/1640
HICKORY VILLAGE #3 PB 6/372

BROWN LINDA K & SALVATORE F
86141 MAPLE LEAF PL
YULEE, FL 32097

2023

42-2N-27-435H-0113-0000

BUILDING CHARACTERISTICS

ELEMENT	CD	CONSTRUCTION
Exterior Wall	10	ABOVE AVG 70
Exterior Wall	16	WD FR STUC 30
Roof Structur	03	GABLE/HIP 100
Roof Cover	03	COMP SHNGL 100
Interior Wall	05	DRYWALL 100
Interior Floo	14	CARPET 80
Interior Floo	08	SHT VINYL 20
Air Condition	03	CENTRAL 100
Heating Type	04	AIR DUCTED 100
Bedrooms		4 100
Bathrooms		3 100
Frame	02	WOOD FRAME 100
Stories	1.5	1.5 100
Units		0 100
Occupancy	00	NONE 100
Quality	06	Quality Level 06
DOR CODE	0100	SINGLE FAMILY
MAP NUM		MKT AREA 04
NEIGHBORHOOD/LOC	4047.00	

AREA TYPE	TOTAL GROSS AREA	PCT OF BASE	TOT ADJ AREA	SUBAREA MARKET VALUE
BAS	2,008	100	2,008	202,141
FGR	462	55	254	25,569
FOP	45	30	14	1,409
FOP	57	30	17	1,711
FUS	384	100	384	38,656
PTO	72	5	4	402
TOTALS	3,028		2,681	269,890

MARKET ADJUSTMENTS

TYPE	MDL	EFF. AREA	TOT ADJ PTS	EFF. BASE RATE	REPL. COST NEW	AYB	EYB	ECON	FNCT		NORM	% COND
0100	01	2,681	121.4400	109.60	293,838	2005	2005	0	0	0	8.15	91.85

1 SINGLE FAM – 100% - 2019 Heated Area: 2392 HX Base Yr 2019

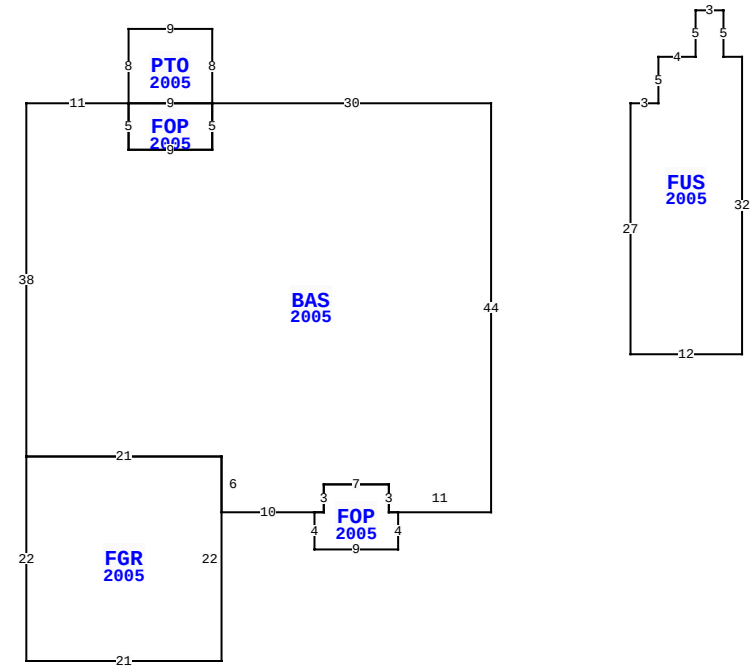

86141 MAPLE LEAF PL, YULEE

BLD DATE	03/14/2023 NW	LGL DATE	
XF DATE		LAND DATE	
INC DATE		AG DATE	

NASSAU COUNTY PROPERTY

PAGE 1 of 1 4

VALUATION SUMMARY

VALUATION BY		STANDARD
Tax Group: 4	Tax Dist:	
BUILDING MARKET VALUE		269,890
TOTAL MARKET OB/XF VALUE		3,521
TOTAL LAND VALUE - MARKET		55,000
TOTAL MARKET VALUE		328,411
SOH/AGL Deduction		109,124
ASSESSED VALUE		219,287
TOTAL EXEMPTION VALUE	HX HB	50,000
BASE TAXABLE VALUE		169,287
TOTAL JUST VALUE		328,411
NCON VALUE		0
INCOME VALUE		
PREVIOUS YEAR MKT VALUE		268,376

PERMIT NUM	DESCRIPTION	AMT	ISSUED
E1225464	ELEC OTHER	0	10/01/2012
B0412787	NEW CONSTR	138,551	11/01/2004
B0412705	FOUNDATION	3,500	04/01/2004

SALES DATA

OFF RECORD Number	DATE	TYPE INST	Q U	V I	RSN CD	SALE PRICE
1983/1640	5/14/2015	SW	Q	I	02	199,000
GRANTOR: WELLS FARGO BANK N A						
GRANTEE: BROWN LINDA K & SAL						
1936/0425	8/20/2014	QC	U	I	11	100
GRANTOR: SECRETARY OF VETERANS						
GRANTEE: WELLS FARGO BANK NA						

BUILDING NOTES

BUILDING DIMENSIONS

BAS=[YR=2005] W30 PTO=[YR=2005] N8 W9 S8 FOP=[YR=2005] S5 E9 N5 W9 $ E9 $ S5 W9 N5 W11 S38 FGR=[YR=2005] S22 E21 N22 W21 $ E21 S6 E10 FOP=[YR=2005] S4 E9 N4 W1 N3 W7 S3 W1 $ E1 N3 E7 S3 E11 N44 $ PTR= E15 FUS=[YR=2005] E3 N5 E4 N5 E3 S5 E2 S32 W12 N27 $ W15 $.

EXTRA FEATURES

LN	OB/XF CODE	DESCRIPTION	BLD	CAP	L	W	UNITS	UT	Adj R	ADJ UNIT PRICE	ORIG COND	YEAR ON	YEAR ACTUAL	Q	% COND	OB/XF MKT VALUE	NOTES
1	0855	CONC PAVER	0	100	27	3	81.00	SF	10.00	10.00	100	2005	2005	3	87	705	
2	0810	CONCRETE A	0	100	0	0	498.00	SF	6.50	6.50	100	2005	2005	3	87	2,816	

LAND DESCRIPTION

TOTAL OB/XF 3,521

LN	USE CODE	CLS	LAND USE DESCRIPTION	CAP	RD	LOC ZONE	FRONT	DEPTH	TOT LND UTS	UNIT TYPE	DT	DPTH FACT	% COND	TOT ADJ	UNIT PRICE	ADJ UNIT PRICE	LAND VALUE	OTHER ADJUSTMENTS AND NOTES	YEAR	DENSITY	DECL	FRZ	YR	CONSRV
1	000100	C	SFR	100	0003	RS-2	0.00	0.00	1.00	LT		1.00	1.00	1.00	55,000.00	55,000.00	55,000							

REVIEW DATE 06/06/2018 BY SBX Total Acres: 0.00 Total Land Value: 55,000 Market: 0 Agricultural: 0 Common: 55,000 PRINTED 08/02/2023 BY SYS