LOT 95
IN OR 1381/1895
HICKORY VILLAGE #3 PB 6/372

DECLARATION OF TRUST/GODFREY ARTHUR L TRUSTEE
86036 RED HOLLY PLACE
YULEE, FL 32097

2023

42-2N-27-435H-0095-0000

NASSAU COUNTY PROPERTY

BUILDING CHARACTERISTICS

ELEMENT	CD	CONSTRUCTION
Exterior Wall	10	ABOVE AVG 70
Exterior Wall	16	WD FR STUC 30
Roof Structur	03	GABLE/HIP 100
Roof Cover	03	COMP SHNGL 100
Interior Wall	05	DRYWALL 100
Interior Floo	14	CARPET 70
Interior Floo	15	HARDTILE 30
Air Condition	03	CENTRAL 100
Heating Type	04	AIR DUCTED 100
Bedrooms		4 100
Bathrooms		3 100
Frame	02	WOOD FRAME 100
Stories	1.	1. 100
Units		0 100
Occupancy	00	NONE 100
Quality	06	Quality Level 06
DOR CODE	0100	SINGLE FAMILY
MAP NUM		MKT AREA 04
NEIGHBORHOOD/LOC	4047.00	

AREA TYPE	TOTAL GROSS AREA	PCT OF BASE	TOT ADJ AREA	SUBAREA MARKET VALUE
BAS	247	100	247	24,457
BAS	2,187	100	2,187	216,545
FEP	413	80	330	32,675
FGR	241	55	133	13,169
FGR	476	55	262	25,942
FOP	36	30	11	1,089
FOP	36	30	11	1,089
FOP	70	30	21	2,079
TOTALS	3,706		3,202	317,044

MARKET ADJUSTMENTS

TYPE	MDL	EFF. AREA	TOT ADJ PTS	EFF. BASE RATE	REPL. COST NEW	AYB	EYB	ECON	FNCT		NORM	% COND
0100	01	3,202	119.4482	107.80	345,176	2005	2005	0	0	0	8.15	91.85

1 SINGLE FAM – 100% - 2006 Heated Area: 2434 HX Base Yr 2006

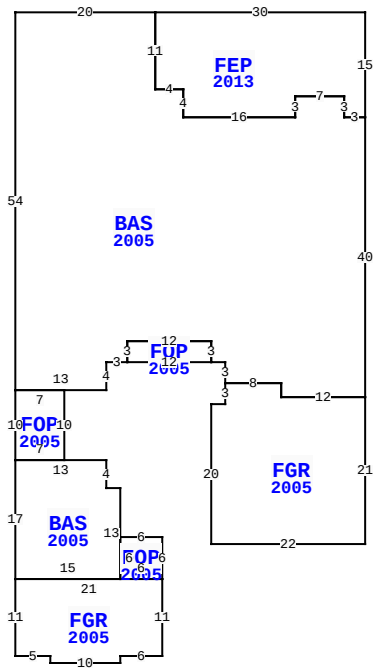

86036 RED HOLLY PL, YULEE

BLD DATE	03/14/2023 NW	LGL DATE	
XF DATE		LAND DATE	
INC DATE		AG DATE	

VALUATION SUMMARY

VALUATION BY		STANDARD
Tax Group: 4	Tax Dist:	
BUILDING MARKET VALUE		317,044
TOTAL MARKET OB/XF VALUE		14,728
TOTAL LAND VALUE - MARKET		55,000
TOTAL MARKET VALUE		386,772
SOH/AGL Deduction		176,079
ASSESSED VALUE		210,693
TOTAL EXEMPTION VALUE	HX HB DX SX	105,000
BASE TAXABLE VALUE		105,693
TOTAL JUST VALUE		386,772
NCON VALUE		0
INCOME VALUE		
PREVIOUS YEAR MKT VALUE		310,871

PERMIT NUM	DESCRIPTION	AMT	ISSUED
B1327570	REMODEL	19,450	08/01/2013
B14570	NEW CONSTR	190,039	01/06/2006
M0509705	H/AC	0	05/01/2005
E14452	ELEC OTHER	2,000	02/01/2005
R07238	REPAIR/RRF	3,500	02/01/2005
P0508984	OTHER	0	02/01/2005

SALES DATA

OFF RECORD Number	DATE	TYPE INST	Q U	V I	RSN CD	SALE PRICE
1381/1895	1/17/2006	WD	Q	I		283,800
GRANTOR: COPPENBARGER HOMES						
GRANTEE: GODFREY ARTHUR L &						
1201/0950	1/13/2004	WD	U	V	19	132,000
GRANTOR: MARSH CREEK DEVELOPME						
GRANTEE: COPPENBARGER HOMES						

BUILDING NOTES

EXTRA FEATURES

LN	OB/XF CODE	DESCRIPTION	BLD	CAP	L	W	UNITS	UT	Adj R	ADJ UNIT PRICE	ORIG COND	YEAR ON	YEAR ACTUAL	Q	% COND	OB/XF MKT VALUE	NOTES
1	0504	FP-ELECTRI	0	100	0	0	1.00	UT	2,000.00	2,000.00	100	2005	2005	3	90	1,800	
2	0812	CONCRETE C	0	100	0	0	1,049.00	SF	4.00	4.00	100	2005	2005	3	87	3,651	
3	0855	CONC PAVER	0	100	0	0	438.00	SF	7.00	7.00	100	2005	2005	3	87	2,667	
4	0855	CONC PAVER	0	100	0	0	360.00	SF	10.00	10.00	100	2013	2013	3	95	3,420	
5	0476	VF 6 SBPL	0	100	0	0	112.00	LF	32.00	32.00	100	2014	2014	3	89	3,190	

BUILDING DIMENSIONS

FEP=[YR=2013] W30 BAS=[YR=2005] W20 S54 FOP=[YR=2005] S10
BAS=[YR=2005] S17 FGR=[YR=2005] S11 E5 S1 E10 N1 E6 N11
FOP=[YR=2005] N6 W6 S6 E6$ W21$ E15 N13 W2 N4 W13$ E7 N10 W7$
E13 N4 E3 FOP=[YR=2005] E12 N3 W12 S3$ N3 E12 S3 E2 S3
FGR=[YR=2005] S3 W2 S20 E22 N21 W12 N2 W8$ E8 S2 E12 N40 W3
N3 W7 S3 W16 N4 W4 N11$ S11 E4 S4 E16 N3 E7 S3 E3 N15$.

LAND DESCRIPTION

TOTAL OB/XF 14,728

LN	USE CODE	CLS	LAND USE DESCRIPTION	CAP	RD	LOC ZONE	FRONT	DEPTH	TOT LND UTS	UNIT TYPE	DT	DPTH FACT	% COND	TOT ADJ	UNIT PRICE	ADJ UNIT PRICE	LAND VALUE	OTHER ADJUSTMENTS AND NOTES	YEAR	DENSITY	DECL	FRZ	YR	CONSRV
1	000100	C	SFR	100		RS-2	0.00	0.00	1.00	LT		1.00	1.00	1.00	55,000.00	55,000.00	55,000							

REVIEW DATE 06/06/2018 BY SBX Total Acres: 0.00 Total Land Value: 55,000 Market: 0 Agricultural: 0 Common: 55,000 PRINTED 08/02/2023 BY SYS