LOT 71
IN OR 1398/1683
HICKORY VILLAGE #1 PB 6/369

BAKER JOANN & BERNARD
86042 SAND HICKORY TRAIL
YULEE, FL 32097

2023

42-2N-27-435H-0071-0000

BUILDING CHARACTERISTICS

ELEMENT	CD	CONSTRUCTION
Exterior Wall	10	ABOVE AVG 70
Exterior Wall	16	WD FR STUC 30
Roof Structur	03	GABLE/HIP 100
Roof Cover	03	COMP SHNGL 100
Interior Wall	05	DRYWALL 100
Interior Floo	14	CARPET 70
Interior Floo	08	SHT VINYL 30
Air Condition	03	CENTRAL 100
Heating Type	04	AIR DUCTED 100
Bedrooms		4 100
Bathrooms		3 100
Frame	02	WOOD FRAME 100
Stories	1.	1. 100
Units		0 100
Occupancy	00	NONE 100
Quality	06	Quality Level 06
DOR CODE	0100	SINGLE FAMILY
MAP NUM		MKT AREA 04
NEIGHBORHOOD/LOC	4047.00	

AREA TYPE	TOTAL GROSS AREA	PCT OF BASE	TOT ADJ AREA	SUBAREA MARKET VALUE
BAS	478	100	478	45,520
BAS	2,231	100	2,231	212,461
FEP	404	80	323	30,760
FGR	457	55	251	23,903
FOP	36	30	11	1,047
FOP	36	30	11	1,047
FOP	80	30	24	2,286
TOTALS	3,722		3,329	317,025

MARKET ADJUSTMENTS

TYPE	MDL	EFF. AREA	TOT ADJ PTS	EFF. BASE RATE	REPL. COST NEW	AYB	EYB	ECON	FNCT		NORM	% COND
0100	01	3,329	114.2640	103.12	343,286	2006	2006	0	0	0	7.65	92.35

1 SINGLE FAM – 100% - 2007 Heated Area: 2709 HX Base Yr 2007

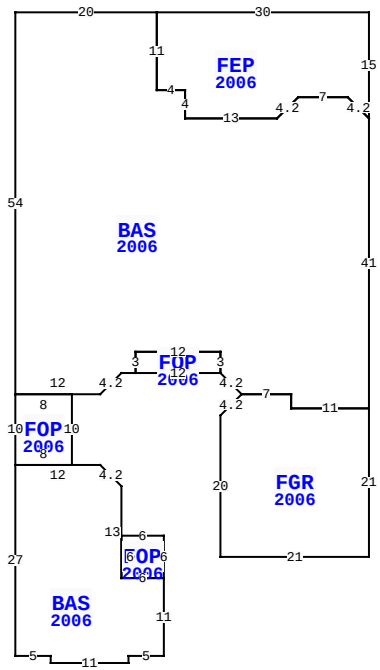

86042 SAND HICKORY TRL, YULEE

BLD DATE	03/14/2023 NW	LGL DATE	
XF DATE		LAND DATE	
INC DATE		AG DATE	

NASSAU COUNTY PROPERTY

PAGE 1 of 1 4

VALUATION SUMMARY

VALUATION BY		STANDARD
Tax Group: 4	Tax Dist:	
BUILDING MARKET VALUE		317,025
TOTAL MARKET OB/XF VALUE		5,442
TOTAL LAND VALUE - MARKET		55,000
TOTAL MARKET VALUE		377,467
SOH/AGL Deduction		173,842
ASSESSED VALUE		203,625
TOTAL EXEMPTION VALUE	HX HB	50,000
BASE TAXABLE VALUE		153,625
TOTAL JUST VALUE		377,467
NCON VALUE		0
INCOME VALUE		
PREVIOUS YEAR MKT VALUE		306,485

PERMIT NUM	DESCRIPTION	AMT	ISSUED
M10014	MECH OTHER	0	07/01/2005
E0514964	ELEC OTHER	2,000	05/01/2005
P0509447	OTHER	0	05/01/2005
C14983	CO ISSUED	197,827	04/01/2005
R07448	REPAIR/RRF	3,500	04/01/2005
B14983	NEW CONSTR	197,827	04/01/2005

SALES DATA

OFF RECORD Number	DATE	TYPE INST	Q / U	V / I	RSN CD	SALE PRICE
1398/1683	3/27/2006	WD	Q	I		265,000
GRANTOR: COPPENBARGER HOMES						
GRANTEE: BAKER JOANN & BERNA						
1295/0320	2/14/2005	WD	U	V	19	246,400
GRANTOR: MARSH CREEK DEVELOPME						
GRANTEE: COPPENBARGER HOMES						

BUILDING NOTES

BUILDING DIMENSIONS

FEP=[YR=2006] W30 BAS=[YR=2006] W20 S54 FOP=[YR=2006] S10 BAS=[YR=2006] S27 E5 S1 E11 N1 E5 N11 FOP=[YR=2006] N6 W6 S6 E6$ W6 N13 L3 U3 W12$ E8 N10 W8$E12 U3 R3 E2 FOP=[YR=2006] E12 N3 W12 S3$ N3 E12 S3 R3 D3 FGR=[YR=2006] D3 L3 S20 E21 N21 W11 N2 W7$ E7 S2 E11 N41 L3 U3 W7 D3 L3 W13 N4 W4 N11$ S11 E4 S4 E13 R3 U3 E7 D3 R3 N15$.

EXTRA FEATURES

LN	OB/XF CODE	DESCRIPTION	BLD	CAP	L	W	UNITS	UT	Adj R	ADJ UNIT PRICE	ORIG COND	YEAR ON	YEAR ACTUAL	Q	% COND	OB/XF MKT VALUE	NOTES
1	0855	CONC PAVER	0	100	0	0	115.00	SF	10.00	10.00	100	2006	2006	3	88	1,012	
2	0811	CONCRETE B	0	100	0	0	968.00	SF	5.20	5.20	100	2006	2006	3	88	4,430	

LAND DESCRIPTION

TOTAL OB/XF 5,442

LN	USE CODE	CLS	LAND USE DESCRIPTION	CAP	RD	LOC ZONE	FRONT	DEPTH	TOT LND UTS	UNIT TYPE	DT	DPTH FACT	% COND	TOT ADJ	UNIT PRICE	ADJ UNIT PRICE	LAND VALUE	OTHER ADJUSTMENTS AND NOTES	YEAR	DENSITY	DECL	FRZ	YR	CONSRV
1	000100	C	SFR	100		RS-2	0.00	0.00	1.00	LT		1.00	1.00	1.00	55,000.00	55,000.00	55,000							

REVIEW DATE 06/06/2018 BY SBX Total Acres: 0.00 Total Land Value: 55,000 Market: 0 Agricultural: 0 Common: 55,000 PRINTED 08/02/2023 BY SYS