LOT 11A
NASSAU CROSSING TOWNHOMES PH 2
OR 2486/1754

PENN ELLA M
86460 SHORTLINE CIR
YULEE, FL 32097

2023

42-2N-27-1091-011A-0000

BUILDING CHARACTERISTICS

ELEMENT	CD	CONSTRUCTION
Exterior Wall	31	HARDIE BRD 100
Roof Structur	03	GABLE/HIP 100
Roof Cover	03	COMP SHNGL 100
Interior Wall	05	DRYWALL 100
Interior Floo	11	CLAY TILE 60
Interior Floo	14	CARPET 40
Air Condition	03	CENTRAL 100
Heating Type	04	AIR DUCTED 100
Bedrooms		3 100
Bathrooms		2.5 100
Frame	02	WOOD FRAME 100
Stories	2.	2. 100
Units		0 100
Occupancy	00	NONE 100
Quality	03	Quality Level 03
DOR CODE	0100	SINGLE FAMILY
MAP NUM		MKT AREA 04
NEIGHBORHOOD/LOC	4092.00	

AREA TYPE	TOTAL GROSS AREA	PCT OF BASE	TOT ADJ AREA	SUBAREA MARKET VALUE
BAS	532	100	532	62,276
FGR	280	55	154	18,027
FOP	36	30	11	1,288
FOP	72	30	22	2,575
FUS	800	100	800	93,648
STR	48	10	5	585
TOTALS	1,768		1,524	178,399

MARKET ADJUSTMENTS

TYPE	MDL	EFF. AREA	TOT ADJ PTS	EFF. BASE RATE	REPL. COST NEW	AYB	EYB	ECON	FNCT		NORM	% COND
0320	01	1,524	123.2160	117.06	178,399	2022	2022	0	0	0	0.00	100.00

1 TOWNHOUSE - 100% - 2023 Heated Area: 1332 HX Base Yr 2023

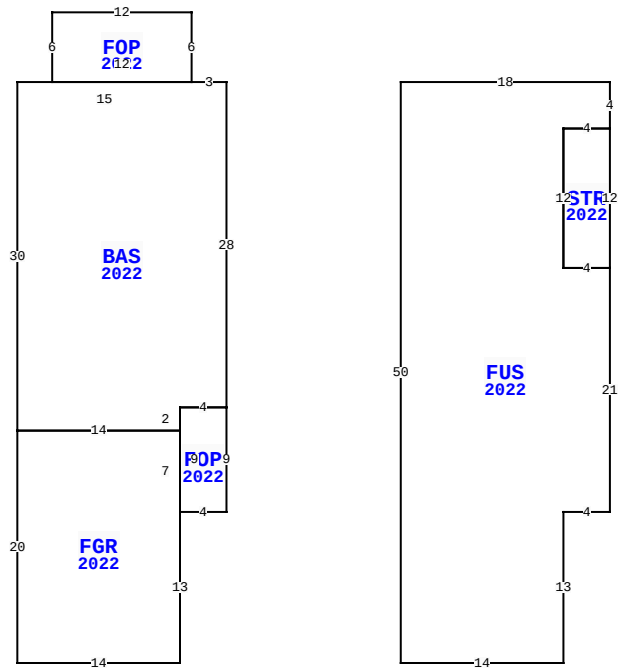

86460 SHORTLINE CIR, YULEE

BLD DATE	04/17/2023 NW	LGL DATE	
XF DATE		LAND DATE	
INC DATE		AG DATE	

NASSAU COUNTY PROPERTY

PAGE 1 of 1 4

VALUATION SUMMARY

VALUATION BY		STANDARD
Tax Group: 4	Tax Dist:	
BUILDING MARKET VALUE		178,399
TOTAL MARKET OB/XF VALUE		2,093
TOTAL LAND VALUE - MARKET		40,000
TOTAL MARKET VALUE		220,492
SOH/AGL Deduction		30,031
ASSESSED VALUE		190,461
TOTAL EXEMPTION VALUE	HX HB	50,000
BASE TAXABLE VALUE		140,461
TOTAL JUST VALUE		220,492
NCON VALUE		180,207
INCOME VALUE		
PREVIOUS YEAR MKT VALUE		32,000

PERMIT NUM	DESCRIPTION	AMT	ISSUED

SALES DATA

OFF RECORD Number	DATE	TYPE INST	Q U	V I	RSN CD	SALE PRICE
2606/0560	11/30/2022	SW	Q	I	01	291,000
GRANTOR: D R HORTON INC-JACKSO						
GRANTEE: PENN ELLA M						
2495/0837	9/09/2021	WD	Q	V	05	448,000
GRANTOR: PATRIOT RIDGE LLP						
GRANTEE: D R HORTON INC-JACK						

BUILDING NOTES

BUILDING DIMENSIONS

BAS=[YR=2022] W3 FOP=[YR=2022] N6 W12 S6 E12$ W15 S30
FGR=[YR=2022] S20 E14 N13 FOP=[YR=2022] E4 N9 W4 S9$ N7 W14$
E14 N2 E4 N28$ PTR=E15 FUS=[YR=2022] E18 S4 STR=[YR=2022] S12
W4 N12 E4$ W4 S12 E4 S21 W4 S13 W14 N50$ W15$.

EXTRA FEATURES

LN	OB/XF CODE	DESCRIPTION	BLD	CAP	L	W	UNITS	UT	Adj R	ADJ UNIT PRICE	ORIG COND	YEAR ON	YEAR ACTUAL	Q	% COND	OB/XF MKT VALUE	NOTES
1	0810	CONCRETE A	0	100	0	0	322.00	SF	6.50	6.50	100	2022	2022	3	100	2,093	

LAND DESCRIPTION

TOTAL OB/XF 2,093

LN	USE CODE	CLS	LAND USE DESCRIPTION	CAP	RD	LOC ZONE	FRONT	DEPTH	TOT LND UTS	UNIT TYPE	DT	DPTH FACT	% COND	TOT ADJ	UNIT PRICE	ADJ UNIT PRICE	LAND VALUE	OTHER ADJUSTMENTS AND NOTES	YEAR	DENSITY	DECL	FRZ	YR	CONSRV
1	000100	C	SFR	100		PUD	0.00	0.00	1.00	LT		1.00	1.00	1.00	40,000.00	40,000.00	40,000							

REVIEW DATE 12/06/2022 BY NW Total Acres: 0.00 Total Land Value: 40,000 Market: 0 Agricultural: 0 Common: 40,000 PRINTED 08/02/2023 BY SYS