IN OR 118/14 & OR 727/1819 &
OR 1391/701 & OR 1089/1484
PARCELS 83-5 83-6 83-3 & 83

PEACOCK DANIEL W & JOYCE A
85027 HARTS LANE
YULEE, FL 32097

2023

42-2N-27-0000-0083-0050

BUILDING CHARACTERISTICS

ELEMENT	CD	CONSTRUCTION
Exterior Wall	19	COMMON BRK 60
Exterior Wall	05	AVERAGE 40
Roof Structur	03	GABLE/HIP 100
Roof Cover	03	COMP SHNGL 100
Interior Wall	05	DRYWALL 100
Interior Floo	14	CARPET 90
Interior Floo	08	SHT VINYL 10
Air Condition	03	CENTRAL 100
Heating Type	04	AIR DUCTED 100
Bedrooms		3 100
Bathrooms		2 100
Frame	02	WOOD FRAME 100
Stories	2.	2. 100
Units		0 100
BUD8 Adjustme	04	DIST 01 100
Occupancy	00	NONE 100
Quality	03	Quality Level 03

DOR CODE	0100	SINGLE FAMILY	
MAP NUM		MKT AREA	04
NEIGHBORHOOD/LOC	4053.00		

AREA TYPE	TOTAL GROSS AREA	PCT OF BASE	TOT ADJ AREA	SUBAREA MARKET VALUE
BAS	958	100	958	73,151
FCP	221	25	55	4,199
FOP	77	30	23	1,756
FSP	221	40	88	6,720
FUS	728	100	728	55,589
UGR	378	45	170	12,981
TOTALS	2,583		2,022	154,396

MARKET ADJUSTMENTS

TYPE	MDL	EFF. AREA	TOT ADJ PTS	EFF. BASE RATE	REPL. COST NEW	AYB	EYB	ECON	FNCT		NORM	% COND
0100	01	2,022	113.8760	102.77	207,801	1972	1980	0	0	0	25.70	74.30

1 SINGLE FAM – 100% - 0 Heated Area: 1686 HX Base Yr

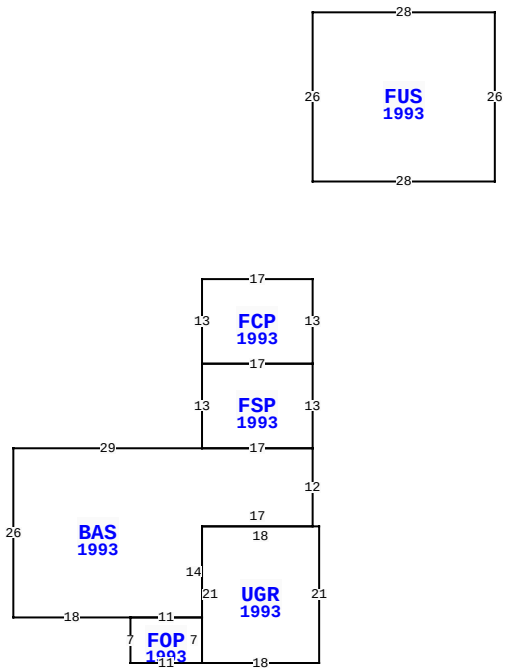

85027 HARTS LN, YULEE

BLD DATE	03/13/2007 GH	LGL DATE	
XF DATE		LAND DATE	
INC DATE		AG DATE	

NASSAU COUNTY PROPERTY

PAGE 1 of 3 4

VALUATION SUMMARY

VALUATION BY		STANDARD
Tax Group: 4	Tax Dist:	
BUILDING MARKET VALUE		336,011
TOTAL MARKET OB/XF VALUE		7,007
TOTAL LAND VALUE - MARKET		262,500
TOTAL MARKET VALUE		605,518
SOH/AGL Deduction		162,922
ASSESSED VALUE		442,596
TOTAL EXEMPTION VALUE	HX HB	50,000
BASE TAXABLE VALUE		392,596
TOTAL JUST VALUE		605,518
NCON VALUE		181,615
INCOME VALUE		
PREVIOUS YEAR MKT VALUE		546,560

PERMIT NUM	DESCRIPTION	AMT	ISSUED
B24201	REPAIR/RRF	9,875	12/01/2010

SALES DATA

OFF RECORD Number	DATE	TYPE INST	Q / U	V / I	RSN CD	SALE PRICE
0727/1819	4/19/1995	WD	U	V	06	2,000

GRANTOR: CLAXTON BRODIE & LEON

GRANTEE: PEACOCK DANIEL & JO

BUILDING NOTES

BUILDING DIMENSIONS

FCP=[YR=1993] W17 S13 FSP=[YR=1993] S13 BAS=[YR=1993] W29 S26 E18 FOP=[YR=1993] S7 E11 UGR=[YR=1993] E18 N21 W18 S21$ N7W11$ E11 N14 E17 N12 W17$ E17 N13 W17$ E17 N13$ PTR=N15 FUS=[YR=1993] E28 N26 W28 S26$ S15$.

EXTRA FEATURES

LN	OB/XF CODE	DESCRIPTION	BLD	CAP	L	W	UNITS	UT	Adj R	ADJ UNIT PRICE	ORIG COND	YEAR ON	YEAR ACTUAL	Q	% COND	OB/XF MKT VALUE	NOTES
2	0680	POLE SHED	0	100	16	32	512.00	SF	10.00	10.00	100	1980	1980	3	20	1,024	
3	0810	CONCRETE A	0	100	18	36	648.00	SF	6.50	6.50	100	1990	1990	3	62	2,611	
5	0510	GARAGE WD-	0	100	24	24	576.00	SF	7.00	7.00	100	1989	1989	3	20	806	
6	0681	POLE SHED	0	100	28	20	560.00	SF	15.00	15.00	100	1970	1970	3	20	1,680	
7	0811	CONCRETE B	0	100	0	0	974.00	SF	2.60	2.60	100	1980	1980	3	35	886	

LAND DESCRIPTION

TOTAL OB/XF 7,007

LN	USE CODE	CLS	LAND USE DESCRIPTION	CAP	RD	LOC ZONE	FRONT	DEPTH	TOT LND UTS	UNIT TYPE	DT	DPTH FACT	% COND	TOT ADJ	UNIT PRICE	ADJ UNIT PRICE	LAND VALUE	OTHER ADJUSTMENTS AND NOTES	YEAR	DENSITY	DECL	FRZ	YR	CONSRV
1	000130	C	SFR WATER	100		RM	60.00	300.00	60.00	FF		1.00	1.00	1.00	1,250.00	1,250.00	75,000							
2	000130	C	SFR WATER	100		RM	150.00	400.00	150.00	FF		1.00	1.00	1.00	1,250.00	1,250.00	187,500							

REVIEW DATE 08/23/2021 BY NWA Total Acres: 0.00 Total Land Value: 262,500 Market: 0 Agricultural: 0 Common: 262,500 PRINTED 08/02/2023 BY SYS

IN OR 118/14 & OR 727/1819 &
OR 1391/701 & OR 1089/1484
PARCELS 83-5 83-6 83-3 & 83

PEACOCK DANIEL W & JOYCE A
85027 HARTS LANE
YULEE, FL 32097

2023

42-2N-27-0000-0083-0050

NASSAU COUNTY PROPERTY

BUILDING CHARACTERISTICS

ELEMENT	CD	CONSTRUCTION
Exterior Wall	15	CONC BLOCK 100
Roof Structur	03	GABLE/HIP 100
Roof Cover	03	COMP SHNGL 100
Interior Wall	05	DRYWALL 100
Interior Floo	08	SHT VINYL 100
Air Condition	03	CENTRAL 100
Heating Type	04	AIR DUCTED 100
Bedrooms		3 100
Bathrooms		1 100
Frame	02	WOOD FRAME 100
Stories	1.	1. 100
Units		0 100
BUD8 Adjustme	04	DIST 01 100
Occupancy	00	NONE 100
Quality	03	Quality Level 03
DOR CODE	0100	SINGLE FAMILY
MAP NUM		MKT AREA 04
NEIGHBORHOOD/LOC	4053.00	

AREA TYPE	TOTAL GROSS AREA	PCT OF BASE	TOT ADJ AREA	SUBAREA MARKET VALUE
BAS	1,176	100	1,176	78,264
FOP	60	30	18	1,198
FOP	288	30	86	5,724
FSP	240	40	96	6,389
UST	96	45	43	2,862
TOTALS	1,860		1,419	94,436

MARKET ADJUSTMENTS

TYPE	MDL	EFF. AREA	TOT ADJ PTS	EFF. BASE RATE	REPL. COST NEW	AYB	EYB	ECON	FNCT		NORM	% COND
0100	01	1,419	98.0000	88.44	125,496	1968	1973	0	0	0	24.75	75.25

2 SINGLE FAM – 0% - 0 Heated Area: 1176 HX Base Yr

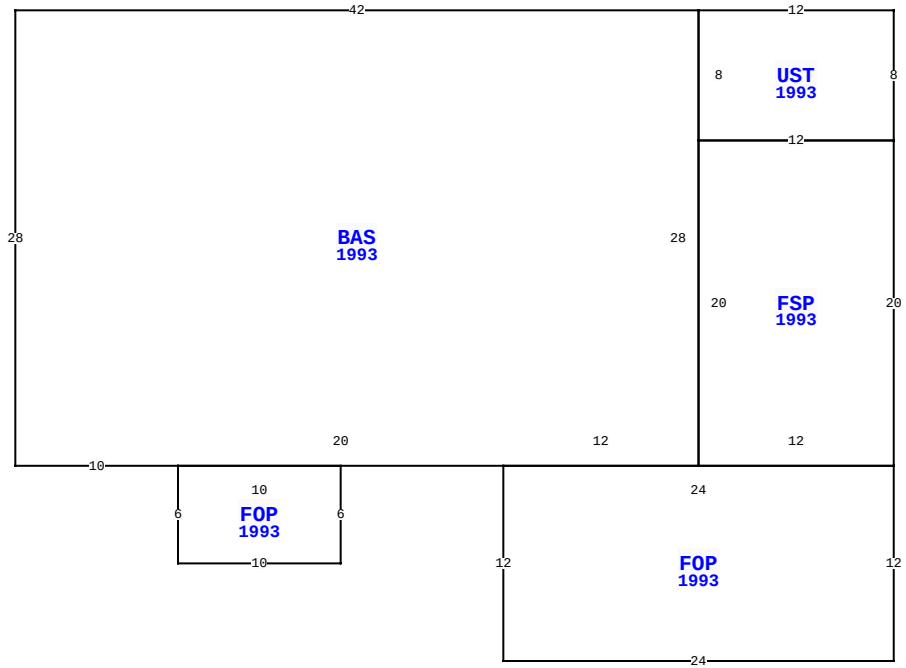

BLD DATE	03/13/2007 GH	LGL DATE	
XF DATE		LAND DATE	
INC DATE		AG DATE	

85027 HARTS LN, YULEE

NASSAU COUNTY PROPERTY

VALUATION SUMMARY

VALUATION BY		STANDARD
Tax Group: 4	Tax Dist:	
BUILDING MARKET VALUE		336,011
TOTAL MARKET OB/XF VALUE		7,007
TOTAL LAND VALUE - MARKET		262,500
TOTAL MARKET VALUE		605,518
SOH/AGL Deduction		162,922
ASSESSED VALUE		442,596
TOTAL EXEMPTION VALUE	HX HB	50,000
BASE TAXABLE VALUE		392,596
TOTAL JUST VALUE		605,518
NCON VALUE		181,615
INCOME VALUE		
PREVIOUS YEAR MKT VALUE		546,560

PERMIT NUM	DESCRIPTION	AMT	ISSUED

SALES DATA

OFF RECORD Number	DATE	TYPE INST	Q / U	V / I	RSN CD	SALE PRICE
0727/1819	4/19/1995	WD	U	V	06	2,000

GRANTOR: CLAXTON BRODIE & LEON

GRANTEE: PEACOCK DANIEL & JO

BUILDING NOTES

BUILDING DIMENSIONS

UST=[YR=1993] W12 BAS=[YR=1993] W42 S28 E10 FOP=[YR=1993] S6 E10 N6 W10$ E20 FOP=[YR=1993] S12 E24 N12 FSP=[YR=1993] N20 W12 S20 E12$ W24$ E12 N28$ S8 E12 N8$.

EXTRA FEATURES

L N	OB/XF CODE	DESCRIPTION	BLD	CAP	L	W	UNITS	UT	Adj R	ADJ UNIT PRICE	ORIG COND	YEAR ON	YEAR ACTUAL	Q	% COND	OB/XF MKT VALUE	NOTES

LAND DESCRIPTION

TOTAL OB/XF 0

L N	USE CODE	CLS	LAND USE DESCRIPTION	CAP	R D	LOC ZONE	FRONT	DEPTH	TOT LND UTS	UNIT TYPE	D T	DPTH FACT	% COND	TOT ADJ	UNIT PRICE	ADJ UNIT PRICE	LAND VALUE	OTHER ADJUSTMENTS AND NOTES	YEAR	DENSITY	DECL	FRZ	YR	CONSRV

REVIEW DATE 08/23/2021 BY NWA Total Acres: 0.00 Total Land Value: 262,500 Market: 0 Agricultural: 0 Common: 262,500 PRINTED 08/02/2023 BY SYS

IN OR 118/14 & OR 727/1819 &
OR 1391/701 & OR 1089/1484
PARCELS 83-5 83-6 83-3 & 83

PEACOCK DANIEL W & JOYCE A
85027 HARTS LANE
YULEE, FL 32097

2023

42-2N-27-0000-0083-0050

NASSAU COUNTY PROPERTY

BUILDING CHARACTERISTICS

ELEMENT	CD	CONSTRUCTION
Exterior Wall	05	AVERAGE 50
Exterior Wall	16	WD FR STUC 50
Roof Structur	03	GABLE/HIP 100
Roof Cover	03	COMP SHNGL 100
Interior Wall	05	DRYWALL 100
Interior Floo	08	SHT VINYL 50
Interior Floo	14	CARPET 50
Air Condition	99	N/A 100
Heating Type		N/A 100
Bedrooms		3 100
Bathrooms		2 100
Frame	02	WOOD FRAME 100
Stories	1.	1. 100
Units		0 100
BUD8 Adjustme	04	DIST 01 100
Occupancy	00	NONE 100
Quality	03	Quality Level 03
DOR CODE	0100	SINGLE FAMILY
MAP NUM		MKT AREA 04
NEIGHBORHOOD/LOC	4053.00	

AREA TYPE	TOTAL GROSS AREA	PCT OF BASE	TOT ADJ AREA	SUBAREA MARKET VALUE
BAS	1,152	100	1,152	71,176
FEP	144	80	115	7,106
FEP	160	80	128	7,909
UOP	80	20	16	988
TOTALS	1,536		1,411	87,179

MARKET ADJUSTMENTS

TYPE	MDL	EFF. AREA	TOT ADJ PTS	EFF. BASE RATE	REPL. COST NEW	AYB	EYB	ECON	FNCT		NORM	% COND
0100	01	1,411	100.5000	90.70	127,978	1951	1951	0	0	0	31.88	68.12

3 SINGLE FAM – 0% - 0 Heated Area: 1152 HX Base Yr

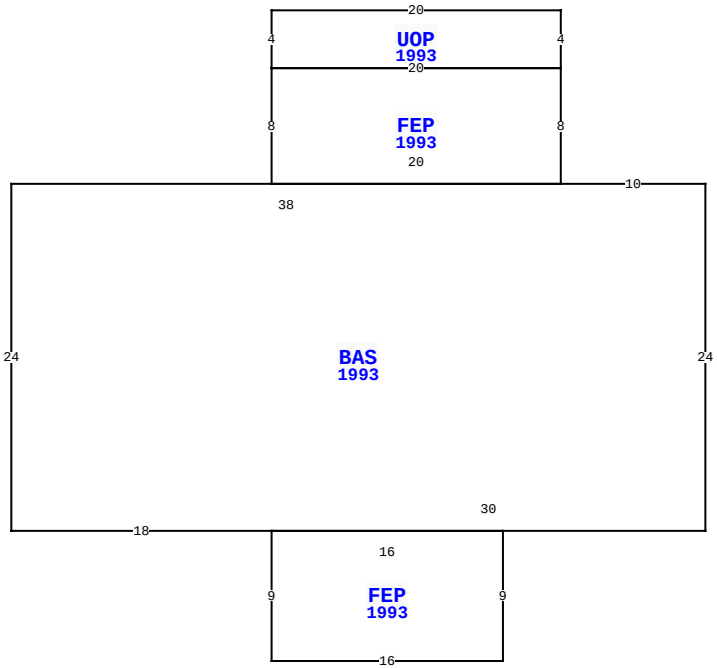

BLD DATE	03/13/2007 GH	LGL DATE
XF DATE		LAND DATE
INC DATE		AG DATE

85027 HARTS LN, YULEE

VALUATION SUMMARY

VALUATION BY		STANDARD
Tax Group: 4	Tax Dist:	
BUILDING MARKET VALUE		336,011
TOTAL MARKET OB/XF VALUE		7,007
TOTAL LAND VALUE - MARKET		262,500
TOTAL MARKET VALUE		605,518
SOH/AGL Deduction		162,922
ASSESSED VALUE		442,596
TOTAL EXEMPTION VALUE	HX HB	50,000
BASE TAXABLE VALUE		392,596
TOTAL JUST VALUE		605,518
NCON VALUE		181,615
INCOME VALUE		
PREVIOUS YEAR MKT VALUE		546,560

PERMIT NUM	DESCRIPTION	AMT	ISSUED

SALES DATA

OFF RECORD Number	DATE	TYPE INST	Q / U	V / I	RSN CD	SALE PRICE
0727/1819	4/19/1995	WD	U	V	06	2,000

GRANTOR: CLAXTON BRODIE & LEON

GRANTEE: PEACOCK DANIEL & JO

BUILDING NOTES

BUILDING DIMENSIONS

BAS=[YR=1993] W10 FEP=[YR=1993] N8 UOP=[YR=1993] N4 W20 S4 E20$ W20 S8 E20$ W38 S24 E18 FEP=[YR=1993] S9 E16 N9 W16$ E30 N24$.

EXTRA FEATURES

L N	OB/XF CODE	DESCRIPTION	BLD	CAP	L	W	UNITS	UT	Adj R	ADJ UNIT PRICE	ORIG COND	YEAR ON	YEAR ACTUAL	Q	% COND	OB/XF MKT VALUE	NOTES

LAND DESCRIPTION

TOTAL OB/XF 0

L N	USE CODE	CLS	LAND USE DESCRIPTION	CAP	R D	LOC ZONE	FRONT	DEPTH	TOT LND UTS	UNIT TYPE	D T	DPTH FACT	% COND	TOT ADJ	UNIT PRICE	ADJ UNIT PRICE	LAND VALUE	OTHER ADJUSTMENTS AND NOTES	YEAR	DENSITY	DECL	FRZ	YR	CONSRV

REVIEW DATE 08/23/2021 BY NWA Total Acres: 0.00 Total Land Value: 262,500 Market: 0 Agricultural: 0 Common: 262,500 PRINTED 08/02/2023 BY SYS