PARCEL 53 & LOTS 14 15 & 16
IN OR 972/1891
EAST YULEE

B & B PATEL INC/
C/O BAKULBHAI & BINDUBEN PATEL, 850857 US HWY 17
YULEE, FL 32097

2023

42-2N-27-0000-0053-0000

NASSAU COUNTY PROPERTY

BUILDING CHARACTERISTICS

ELEMENT	CD	CONSTRUCTION
Exterior Wall	17	CB STUCCO 100
Roof Structur	01	FLAT 100
Roof Cover	04	BUILT-UP 100
Interior Wall	05	DRYWALL 100
Interior Floo	14	CARPET 90
Interior Floo	08	SHT VINYL 10
Ceiling	01	FIN.SUSPD 100
Air Condition	02	WINDOW 100
Heating Type	02	CONVECTION 100
Fixtures		123 100
Frame	03	MASONRY 100
Story Height		10 100
RMS		16 100
Units		0 100
BUD8 Adjustme	04	DIST 01 100
Occupancy	00	NONE 100
Quality	03	Quality Level 03
DOR CODE	3900	HOTELS AND MOTELS
MAP NUM		MKT AREA 04
NEIGHBORHOOD/LOC	4051.00	

AREA TYPE	TOTAL GROSS AREA	PCT OF BASE	TOT ADJ AREA	SUBAREA MARKET VALUE
AOF	712	100	712	12,823
APT	1,032	100	1,032	18,586
BAS	720	100	720	12,967
BAS	4,284	100	4,284	77,155
CAN	48	30	14	252
CAN	101	30	30	540
CAN	200	30	60	1,081
CAN	1,008	30	302	5,439
CAN	1,160	30	348	6,267
CAN	126	30	38	684
TOTALS	9,749		7,647	137,722

MARKET ADJUSTMENTS

TYPE	MDL	EFF. AREA	TOT ADJ PTS	EFF. BASE RATE	REPL. COST NEW	AYB	EYB	ECON	FNCT		NORM	% COND
3901	07	7,647	97.6165	90.05	688,612	1950	1970	0	0	0	80.00	20.00

1 MOTEL - 0% - 0 Heated Area: 6748 HX Base Yr

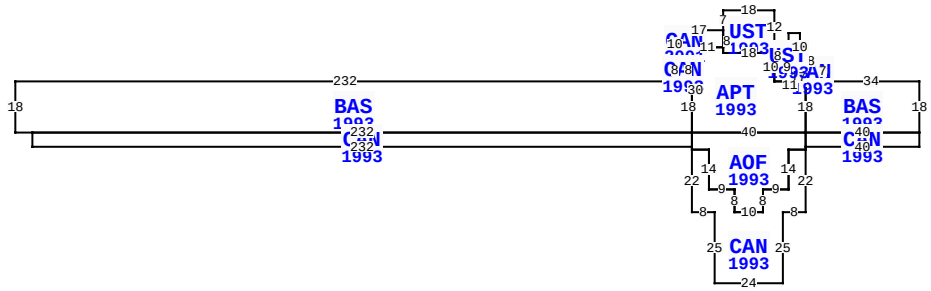

** This building has 12 Sub-Areas

850857 US HWY 17, YULEE

BLD DATE	01/14/2019	KK	LGL DATE	
XF DATE	01/14/2019	KK	LAND DATE	04/01/2023 DCA
INC DATE			AG DATE	

NASSAU COUNTY PROPERTY

VALUATION SUMMARY

VALUATION BY	DIRECT_CAP
Tax Group: 4	Tax Dist:
BUILDING MARKET VALUE	504,291
TOTAL MARKET OB/XF VALUE	0
TOTAL LAND VALUE - MARKET	0
TOTAL MARKET VALUE	630,364
SOH/AGL Deduction	0
ASSESSED VALUE	630,364
TOTAL EXEMPTION VALUE	0
BASE TAXABLE VALUE	630,364
TOTAL JUST VALUE	630,364
NCON VALUE	0
INCOME VALUE	630,364
PREVIOUS YEAR MKT VALUE	697,607

PERMIT NUM	DESCRIPTION	AMT	ISSUED
19003563	REPAIR/RRF	11,500	04/30/2019
6119	REMODEL	1,500	11/15/1989
3470	REMODEL	8,000	07/10/1986

SALES DATA

OFF RECORD Number	DATE	TYPE INST	Q / U	V / I	RSN CD	SALE PRICE
0972/1891	3/01/2001	WD	U	I	01	100
GRANTOR: PATEL BAKULBHAI C & B						
GRANTEE: B&B PATEL INC						
0747/0059	12/21/1995	WD	U	I	12	680,000
GRANTOR: KNAPP PHILIP						
GRANTEE: PATEL BAKULBHAI C &						

BUILDING NOTES

BUILDING DIMENSIONS

BAS=[YR=1993] W34 CAN=[YR=1993] N7 W8 UST=[YR=1993] N10 W4 S4 W5 UST=[YR=1993] N12 W18 S7 CAN=[YR=2001] W17 S10 CAN=[YR=1993] S8BAS=[YR=1993] W232 S18 E6 CAN=[YR=1993] S5 E232 AOF=[YR=1993] S1 CAN=[YR=1993] S22 E8 S25 E24 N25E8 N22 W6 S14 W9 S8 W10 N8 W9 N14 W6 $ E6 S14 E9 S8 E10 N8 E9 N14 E6 N1 CAN=[YR=1993] E40 N5 W40 S5 $ N5 W40 S5 $ N5 W232 $E232 N18 W6 $ E6 N8 W6 $ E6 N4E11 N6 $ S8 E18 N3 $ S8 E9 N2 $ S2 W9 S5 E17 $ W6 APT=[YR=1993] W11 N10 W18 N2 W11 S30 E40 N18$ S18 E40 N18 $.

EXTRA FEATURES

LN	OB/XF CODE	DESCRIPTION	BLD	CAP	L	W	UNITS	UT	Adj R	ADJ UNIT PRICE	ORIG COND	YEAR ON	YEAR ACTUAL	Q	% COND	OB/XF MKT VALUE	NOTES
1	0803	ASPHALT C	0	0	0	0	15,186.00	SF	2.00	2.00	100	1986	1986	3	50	15,186	
2	0812	CONCRETE C	0	0	0	0	6,791.00	SF	4.00	4.00	100	1950	1950	3	20	5,433	
3	0383	FREEZER	0	0	6	12	120.00	SF	105.00	105.00	100	1980	1980	3	20	2,520	
4	0382	CHILLER	0	0	6	12	72.00	SF	92.50	92.50	100	1980	1980	3	20	1,332	
5	0443	STK FNC 6'	0	0	0	0	116.00	LF	10.00	10.00	100	1990	1990	3	20	232	
6	0400	CONC CURB	0	0	0	0	1,230.00	LF	15.00	15.00	100	1985	1985	3	60	11,070	
7	0940	SHEDS/PORT	0	0	6	8	48.00	SF	30.00	30.00	100	1950	1950	3	20	288	
9	0881	FOUNTAIN	0	0	0	0	1.00	UT	5,000.00	5,000.00	100	1990	1990	3	100	5,000	
10	0801	ASPHALT A	0	0	0	0	408.00	SF	3.00	3.00	100	1999	1999	3	50	612	
11	0418	EXHST FAN	0	0	0	0	1.00	UT	400.00	400.00	100	1980	1980	3	20	80	

TOTAL OB/XF 41,753

LAND DESCRIPTION

LN	USE CODE	CLS	LAND USE DESCRIPTION	CAP	RD	LOC ZONE	FRONT	DEPTH	TOT LND UTS	UNIT TYPE	DT	DPTH FACT	% COND	TOT ADJ	UNIT PRICE	ADJ UNIT PRICE	LAND VALUE	OTHER ADJUSTMENTS AND NOTES	YEAR	DENSITY	DECL	FRZ	YR	CONSRV
1	003900	C	MOTEL	0		CI	300.00	250.00	101,495.00	SF		1.00	1.00	1.00	5.00	5.00	507,475							

REVIEW DATE 01/14/2019 BY KK Total Acres: 0.00 Total Land Value: 126,073 Market: 0 Agricultural: 0 Common: 0 PRINTED 08/02/2023 BY SYS

PARCEL 53 & LOTS 14 15 & 16
IN OR 972/1891
EAST YULEE

B & B PATEL INC/
C/O BAKULBHAI & BINDUBEN PATEL, 850857 US HWY 17
YULEE, FL 32097

2023

42-2N-27-0000-0053-0000

NASSAU COUNTY PROPERTY

BUILDING CHARACTERISTICS

ELEMENT	CD	CONSTRUCTION
Exterior Wall	15	CONC BLOCK 60
Exterior Wall	17	CB STUCCO 40
Roof Structur	01	FLAT 100
Roof Cover	04	BUILT-UP 100
Interior Wall	05	DRYWALL 100
Interior Floo	14	CARPET 100
Ceiling	02	F.NOT SUS 100
Air Condition	02	WINDOW 100
Heating Type	02	CONVECTION 100
Fixtures		56 100
Frame	03	MASONRY 100
Story Height		10 100
RMS		15 100
Units		0 100
BUD8 Adjustme	04	DIST 01 100
Occupancy	00	NONE 100
Quality	03	Quality Level 03
DOR CODE	3900	HOTELS AND MOTELS
MAP NUM		MKT AREA 04
NEIGHBORHOOD/LOC	4051.00	

AREA TYPE	TOTAL GROSS AREA	PCT OF BASE	TOT ADJ AREA	SUBAREA MARKET VALUE
BAS	2,080	100	2,080	39,067
CAN	320	30	96	1,803
CAN	360	30	108	2,028
CAN	368	30	110	2,066
FUS	2,392	100	2,392	44,927
TOTALS	5,520		4,786	89,891

MARKET ADJUSTMENTS

TYPE	MDL	EFF. AREA	TOT ADJ PTS	EFF. BASE RATE	REPL. COST NEW	AYB	EYB	ECON	FNCT		NORM	% COND
3901	07	4,786	101.7960	93.91	449,453	1950	1970	0	0	0	80.00	20.00

2 MOTEL – 0% - 0 Heated Area: 4472 HX Base Yr

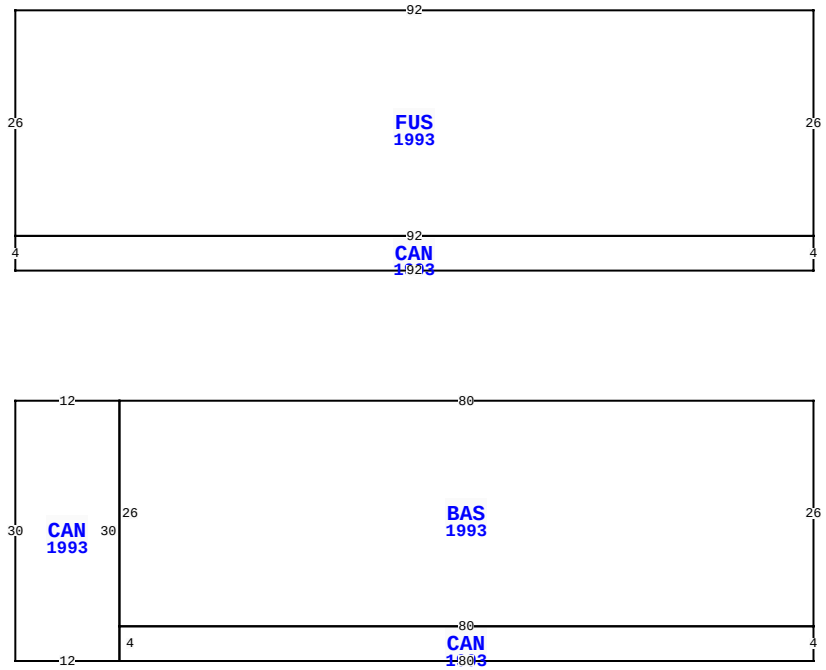

850857 US HWY 17, YULEE

BLD DATE	01/14/2019	KK	LGL DATE	
XF DATE	01/14/2019	KK	LAND DATE	04/01/2023 DCA
INC DATE			AG DATE	

NASSAU COUNTY PROPERTY — VALUATION SUMMARY

VALUATION BY	DIRECT_CAP
Tax Group: 4	Tax Dist:
BUILDING MARKET VALUE	504,291
TOTAL MARKET OB/XF VALUE	0
TOTAL LAND VALUE - MARKET	0
TOTAL MARKET VALUE	630,364
SOH/AGL Deduction	0
ASSESSED VALUE	630,364
TOTAL EXEMPTION VALUE	0
BASE TAXABLE VALUE	630,364
TOTAL JUST VALUE	630,364
NCON VALUE	0
INCOME VALUE	630,364
PREVIOUS YEAR MKT VALUE	697,607

PERMIT NUM	DESCRIPTION	AMT	ISSUED

SALES DATA

OFF RECORD Number	DATE	TYPE INST	Q / U	V / I	RSN CD	SALE PRICE
0972/1891	3/01/2001	WD	U	I	01	100
GRANTOR: PATEL BAKULBHAI C & B						
GRANTEE: B&B PATEL INC						
0747/0059	12/21/1995	WD	U	I	12	680,000
GRANTOR: KNAPP PHILIP						
GRANTEE: PATEL BAKULBHAI C &						

BUILDING NOTES

BUILDING DIMENSIONS

BAS=[YR=1993] W80 CAN=[YR=1993] W12 S30 E12 CAN=[YR=1993]
E80 N4 W80 S4 $ N30 $ S26 E80 N26 $ PTR= N15 CAN=[YR=1993]
N4 FUS=[YR=1993] N26 W92 S26 E92 $ W92 S4 E92 $ S15 $.

EXTRA FEATURES

LN	OB/XF CODE	DESCRIPTION	BLD	CAP	L	W	UNITS	UT	Adj R	ADJ UNIT PRICE	ORIG COND	YEAR ON	YEAR ACTUAL	Q	% COND	OB/XF MKT VALUE	NOTES
12	0400	CONC CURB	0	0	0	0	142.00	LF	15.00	15.00	100	1999	1999	3	84	1,789	
13	0964	HALON SYST	0	0	2	8	16.00	SF	50.00	50.00	100	1980	1980	3	60	480	
15	0803	ASPHALT C	0	0	0	0	3,307.00	SF	2.00	2.00	100	1997	1997	3	50	3,307	
16	1127	BRICK 8"	0	0	15	4	60.00	SF	11.00	11.00	100	1950	1950	3	20	132	
17	1127	BRICK 8"	0	0	20	2	40.00	SF	11.00	11.00	100	1950	1950	3	20	88	
18	0810	CONCRETE A	0	0	11	12	132.00	SF	6.50	6.50	100	1950	1950	3	20	172	
19	0810	CONCRETE A	0	0	5	12	60.00	SF	6.50	6.50	100	1950	1950	3	20	78	
20	0810	CONCRETE A	0	0	17	7	119.00	SF	6.50	6.50	100	2002	2002	3	83	642	
21	0402	CONC BUMPE	0	0	0	0	10.00	UT	25.00	25.00	100	2015	2015	3	97	243	

LAND DESCRIPTION

TOTAL OB/XF 6,931

LN	USE CODE	CLS	LAND USE DESCRIPTION	CAP	RD	LOC ZONE	FRONT	DEPTH	TOT LND UTS	UNIT TYPE	DT	DPTH FACT	% COND	TOT ADJ	UNIT PRICE	ADJ UNIT PRICE	LAND VALUE	OTHER ADJUSTMENTS AND NOTES	YEAR	DENSITY	DECL	FRZ	YR	CONSRV

REVIEW DATE 01/14/2019 BY KK Total Acres: 0.00 Total Land Value: 126,073 Market: 0 Agricultural: 0 Common: 0 PRINTED 08/02/2023 BY SYS

PARCEL 53 & LOTS 14 15 & 16
IN OR 972/1891
EAST YULEE

B & B PATEL INC/
C/O BAKULBHAI & BINDUBEN PATEL, 850857 US HWY 17
YULEE, FL 32097

2023

42-2N-27-0000-0053-0000

NASSAU COUNTY PROPERTY

BUILDING CHARACTERISTICS

ELEMENT	CD	CONSTRUCTION
Exterior Wall	15	CONC BLOCK 70
Exterior Wall	20	FACE BRICK 30
Roof Structur	04	WOOD TRUSS 100
Roof Cover	02	ROLL COMP 100
Interior Wall	03	PLASTER 60
Interior Wall	06	CUST PANEL 40
Interior Floo	15	HARDTILE 100
Ceiling	02	F.NOT SUS 100
Air Condition	03	CENTRAL 100
Heating Type	04	AIR DUCTED 100
Fixtures		26 100
Frame	03	MASONRY 100
Story Height		12 100
RMS		5 100
Stories	1.	1. 100
Units		0 100
Occupancy	00	NONE 100
Quality	02	Quality Level 02
DOR CODE	3900	HOTELS AND MOTELS
MAP NUM		MKT AREA 04
NEIGHBORHOOD/LOC	4051.00	

AREA TYPE	TOTAL GROSS AREA	PCT OF BASE	TOT ADJ AREA	SUBAREA MARKET VALUE
BAS	1,466	100	1,466	73,889
BAS	144	100	144	7,258
BAS	153	100	153	7,711
BAS	339	100	339	17,086
BAS	698	100	698	35,180
CAN	15	30	4	202
CAN	33	30	10	504
CAN	596	30	179	9,022
PTO	108	5	5	252
PTO	364	5	18	907
TOTALS	4,189		3,125	157,504

MARKET ADJUSTMENTS

TYPE	MDL	EFF. AREA	TOT ADJ PTS	EFF. BASE RATE	REPL. COST NEW	AYB	EYB	ECON	FNCT		NORM	% COND
2101	04	3,125	116.0640	205.72	642,875	1950	1975	0	0	0	75.50	24.50

3 RSTARANT 1 – 0% - 0 Heated Area: 2800 HX Base Yr

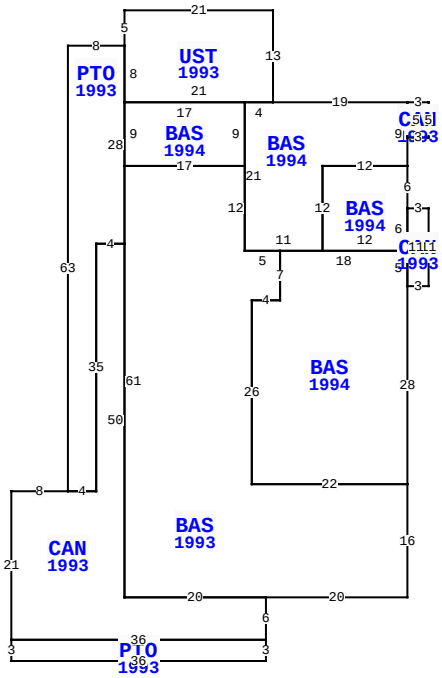

** This building has 11 Sub-Areas

850857 US HWY 17, YULEE

BLD DATE	01/14/2019	KK	LGL DATE	
XF DATE	01/14/2019	KK	LAND DATE	04/01/2023 DCA
INC DATE			AG DATE	

VALUATION SUMMARY

VALUATION BY	DIRECT_CAP
Tax Group: 4	Tax Dist:
BUILDING MARKET VALUE	504,291
TOTAL MARKET OB/XF VALUE	0
TOTAL LAND VALUE - MARKET	0
TOTAL MARKET VALUE	630,364
SOH/AGL Deduction	0
ASSESSED VALUE	630,364
TOTAL EXEMPTION VALUE	0
BASE TAXABLE VALUE	630,364
TOTAL JUST VALUE	630,364
NCON VALUE	0
INCOME VALUE	630,364
PREVIOUS YEAR MKT VALUE	697,607

PERMIT NUM	DESCRIPTION	AMT	ISSUED

SALES DATA

OFF RECORD Number	DATE	TYPE INST	Q / U	V / I	RSN CD	SALE PRICE
0972/1891	3/01/2001	WD	U	I	01	100
GRANTOR: PATEL BAKULBHAI C & B						
GRANTEE: B&B PATEL INC						
0747/0059	12/21/1995	WD	U	I	12	680,000
GRANTOR: KNAPP PHILIP						
GRANTEE: PATEL BAKULBHAI C &						

BUILDING NOTES

BUILDING DIMENSIONS

CAN=[YR=1993] W3 BAS=[YR=1994] W19 UST=[YR=1993] N13 W21 S5 PTO=[YR=1993] W8 S63 CAN=[YR=1993] W8 S21 PTO=[YR=1993] S3 E36 N3 W36 $ E36 N6 BAS=[YR=1993] E20 N16 BAS=[YR=1994] N28 CAN=[YR=1993] E3 N11 W3 BAS=[YR=1994] N6 W12 S12 E12N6 $S11$N5 W18 S7 W4 S26 E22 $ W22 N26 E4 N7 W5 N12 BAS=[YR=1994] N9 W17 S9 E17 $ W17 S61 E20 $ W20 N50 W4 S35 W4 $ E4 N35 E4 N28 $ S8E21 $ W4 S21 E11 N12 E12 N9$ S5 E3 N5 $.

EXTRA FEATURES

LN	OB/XF CODE	DESCRIPTION	BLD	CAP	L	W	UNITS	UT	Adj R	ADJ UNIT PRICE	ORIG COND	YEAR ON	YEAR ACTUAL	Q	% COND	OB/XF MKT VALUE	NOTES

LAND DESCRIPTION

TOTAL OB/XF 0

LN	USE CODE	CLS	LAND USE DESCRIPTION	CAP	RD	LOC ZONE	FRONT	DEPTH	TOT LND UTS	UNIT TYPE	DT	DPTH FACT	% COND	TOT ADJ	UNIT PRICE	ADJ UNIT PRICE	LAND VALUE	OTHER ADJUSTMENTS AND NOTES	YEAR	DENSITY	DECL	FRZ	YR	CONSRV

REVIEW DATE 01/14/2019 BY KK Total Acres: 0.00 Total Land Value: 126,073 Market: 0 Agricultural: 0 Common: 0 PRINTED 08/02/2023 BY SYS