PT JOHN LOWE MILL GRANT
SEC 42-2N-27E IN OR 847/412

ARNETT FREDERICK H JR & NANCY
PO BOX 1036
YULEE, FL 32041

2023

42-2N-27-0000-0005-0050

NASSAU COUNTY PROPERTY

BUILDING CHARACTERISTICS

ELEMENT	CD	CONSTRUCTION
Exterior Wall	19	COMMON BRK 100
Roof Structur	03	GABLE/HIP 100
Roof Cover	03	COMP SHNGL 100
Interior Wall	05	DRYWALL 100
Interior Floo	11	CLAY TILE 50
Interior Floo	14	CARPET 50
Air Condition	03	CENTRAL 100
Heating Type	04	AIR DUCTED 100
Bedrooms		3 100
Bathrooms		3 100
Frame	02	WOOD FRAME 100
Stories	2.	2. 100
Units		0 100
Occupancy	00	NONE 100
Quality	03	Quality Level 03
DOR CODE	0100	SINGLE FAMILY
MAP NUM		MKT AREA 04
NEIGHBORHOOD/LOC	4048.00	

AREA TYPE	TOTAL GROSS AREA	PCT OF BASE	TOT ADJ AREA	SUBAREA MARKET VALUE
BAS	2,932	100	2,932	424,731
FGR	840	55	462	66,925
FOP	81	30	24	3,477
FOP	180	30	54	7,822
FOP	240	30	72	10,430
FST	30	55	16	2,317
FUS	1,240	100	1,240	179,627
UOP	112	20	22	3,187
UOP	315	20	63	9,126
TOTALS	5,970		4,885	707,643

MARKET ADJUSTMENTS

TYPE	MDL	EFF. AREA	TOT ADJ PTS	EFF. BASE RATE	REPL. COST NEW	AYB	EYB	ECON	FNCT		NORM	% COND
0500	01	4,885	125.5000	178.84	873,633	2000	2000	0	0	0	19.00	81.00

1 SFR CUST - 100% - 2001 Heated Area: 4172 HX Base Yr 2001

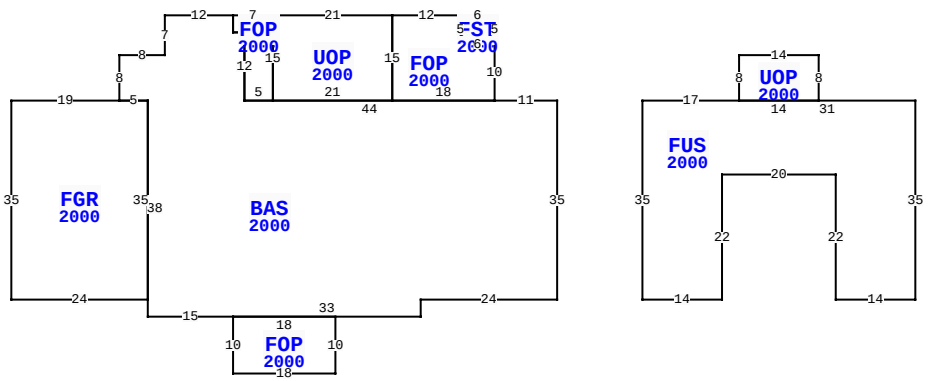

85454 FLYING A RANCH, YULEE

BLD DATE		LGL DATE	
XF DATE		LAND DATE	
INC DATE		AG DATE	

VALUATION SUMMARY

VALUATION BY		STANDARD
Tax Group: 4	Tax Dist:	
BUILDING MARKET VALUE		707,643
TOTAL MARKET OB/XF VALUE		51,571
TOTAL LAND VALUE - MARKET		194,560
TOTAL MARKET VALUE		953,774
SOH/AGL Deduction		466,091
ASSESSED VALUE		487,683
TOTAL EXEMPTION VALUE	HX HB	50,000
BASE TAXABLE VALUE		437,683
TOTAL JUST VALUE		953,774
NCON VALUE		0
INCOME VALUE		
PREVIOUS YEAR MKT VALUE		702,454

PERMIT NUM	DESCRIPTION	AMT	ISSUED
B5412	NEW CONSTR	155,005	09/01/1998
C5412	CO ISSUED	155,005	09/01/1998

SALES DATA

OFF RECORD Number	DATE	TYPE INST	Q U	V I	RSN CD	SALE PRICE
0847/0412	8/24/1998	DG	U	V	01	100

GRANTOR: ARNETT FREDERICK H SR

GRANTEE: ARNETT FREDERICK JR

BUILDING NOTES

BUILDING DIMENSIONS

BAS=[YR=2000] W11 FOP=[YR=2000] N10 FST=[YR=2000] N5 W6 S5 E6 $ W6 N5 W12 UOP=[YR=2000] W21 FOP=[YR=2000] W7 S3 E2 S12 E5 N15 $ S15 E21 N15 $ S15 E18 $ W44 N12 W2 N3 W12 S7 W8 S8 FGR=[YR=2000] W19 S35 E24 N35 W5 $ E5 S38 E15 FOP=[YR=2000] S10 E18 N10 W18 $ E33 N3 E24 N35 $ PTR= E15 FUS=[YR=2000] E17 UOP=[YR=2000] N8 E14 S8 W14 $ E31 S35 W14 N22 W20 S22 W14 N35 $ W15 $.

EXTRA FEATURES

LN	OB/XF CODE	DESCRIPTION	BLD	CAP	L	W	UNITS	UT	Adj R	ADJ UNIT PRICE	ORIG COND	YEAR ON	YEAR ACTUAL	Q	% COND	OB/XF MKT VALUE	NOTES
1	0812	CONCRETE C	0	100	0	0	8,858.00	SF	4.00	4.00	100	2000	2000	3	80	28,346	
2	0861	POOL GUNIT	0	100	32	16	512.00	SF	85.00	85.00	100	2000	2000	3	27	11,750	
3	0845	KOOL DECK	0	100	0	0	1,101.00	SF	7.25	7.25	100	2000	2000	3	80	6,386	
5	1127	BRICK 8"	0	100	0	0	35.00	SF	11.00	11.00	100	2000	2000	3	94	362	
6	1128	BRICK 12"	0	100	0	0	72.00	SF	14.00	14.00	100	2000	2000	3	94	948	
7	1128	BRICK 12"	0	100	0	0	96.00	SF	14.00	14.00	100	2000	2000	3	94	1,263	
8	0877	JACUZZI	0	100	0	0	1.00	UT	1,000.00	1,000.00	100	2000	2000	3	20	200	
9	1128	BRICK 12"	0	100	0	0	100.00	SF	14.00	14.00	100	2000	2000	3	94	1,316	
10	0600	SUMMER KIT	0	100	0	0	1.00	UT	5,000.00	5,000.00	100	2000	2000	3	20	1,000	

LAND DESCRIPTION

TOTAL OB/XF 51,571

LN	USE CODE	CLS	LAND USE DESCRIPTION	CAP	RD	LOC ZONE	FRONT	DEPTH	TOT LND UTS	UNIT TYPE	DT	DPTH FACT	% COND	TOT ADJ	UNIT PRICE	ADJ UNIT PRICE	LAND VALUE	OTHER ADJUSTMENTS AND NOTES	YEAR	DENSITY	DECL	FRZ	YR	CONSRV
1	000115	C	SFR ACRES	100			0.00	0.00	3.04	AC		1.00	1.00	0.80	80,000.00	64,000.00	194,560							

REVIEW DATE 06/08/2017 BY SBX Total Acres: 3.04 Total Land Value: 194,560 Market: 0 Agricultural: 0 Common: 194,560 PRINTED 08/02/2023 BY SYS