PT OF FRANCES WOODS DONATION
SEC 42-2N-25E IN OR 1250/178
& N1/2 OF ABND R/R LYING S

CROSBY CHARLES D & SHERRIE L
55251 PITTMAN ROAD
CALLAHAN, FL 32011

2023

42-2N-25-0000-0006-0050

NASSAU COUNTY PROPERTY

BUILDING CHARACTERISTICS

ELEMENT	CD	CONSTRUCTION
Exterior Wall	20	FACE BRICK 100
Roof Structur	03	GABLE/HIP 100
Roof Cover	03	COMP SHNGL 100
Interior Wall	05	DRYWALL 100
Interior Floo	14	CARPET 60
Interior Floo	11	CLAY TILE 40
Air Condition	03	CENTRAL 100
Heating Type	04	AIR DUCTED 100
Bedrooms		3 100
Bathrooms		2.5 100
Frame	02	WOOD FRAME 100
Stories	1.	1. 100
Units		0 100
Occupancy	00	NONE 100
Quality	02	Quality Level 02
DOR CODE	0100	SINGLE FAMILY
MAP NUM		MKT AREA 08
NEIGHBORHOOD/LOC	8026.00	

AREA TYPE	TOTAL GROSS AREA	PCT OF BASE	TOT ADJ AREA	SUBAREA MARKET VALUE
BAS	2,251	100	2,251	253,022
FCP	565	25	141	15,849
FOP	12	30	4	449
FOP	200	30	60	6,744
FOP	419	30	126	14,163
STP	12	10	1	113
STP	15	10	2	225
UST	33	45	15	1,686
TOTALS	3,507		2,600	292,251

MARKET ADJUSTMENTS

TYPE	MDL	EFF. AREA	TOT ADJ PTS	EFF. BASE RATE	REPL. COST NEW	AYB	EYB	ECON	FNCT		NORM	% COND
0900	01	2,600	108.4900	128.83	334,958	2005	2005	0	0	0	12.75	87.25

1 SNGL FAM – 100% - 2006 Heated Area: 2251 HX Base Yr 2006

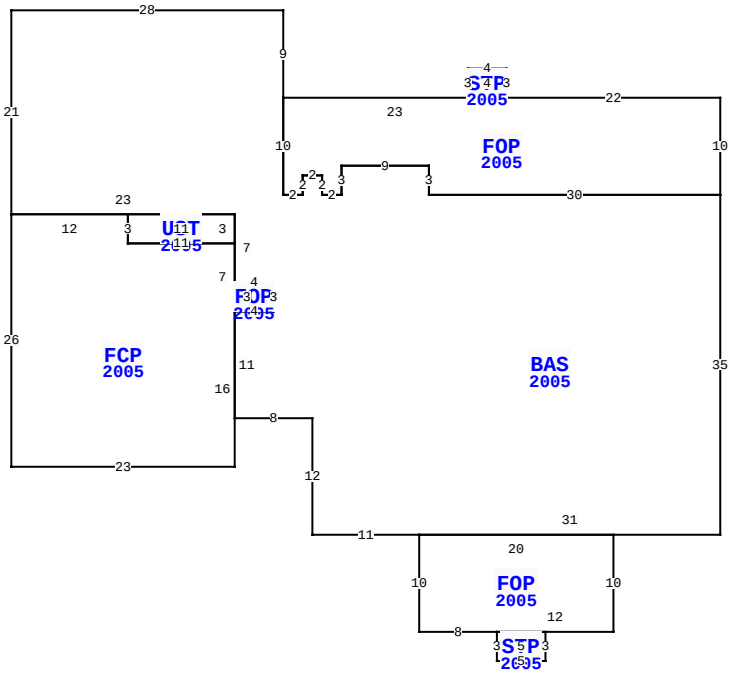

55251 PITTMAN RD, CALLAHAN

BLD DATE	03/03/2023 NW	LGL DATE	
XF DATE		LAND DATE	
INC DATE		AG DATE	

VALUATION SUMMARY

VALUATION BY		STANDARD
Tax Group: 6	Tax Dist:	
BUILDING MARKET VALUE		292,251
TOTAL MARKET OB/XF VALUE		3,150
TOTAL LAND VALUE - MARKET		75,600
TOTAL MARKET VALUE		371,001
SOH/AGL Deduction		193,419
ASSESSED VALUE		177,582
TOTAL EXEMPTION VALUE	HX HB	50,000
BASE TAXABLE VALUE		127,582
TOTAL JUST VALUE		371,001
NCON VALUE		0
INCOME VALUE		
PREVIOUS YEAR MKT VALUE		300,464

PERMIT NUM	DESCRIPTION	AMT	ISSUED
B13698	NEW CONSTR	175,048	10/01/2004
R6672	REPAIR/RRF	3,500	10/01/2004

SALES DATA

OFF RECORD Number	DATE	TYPE INST	Q U	V I	RSN CD	SALE PRICE
1250/0178	8/03/2004	WD	U	V	06	100

GRANTOR: DIMARIA WM & LAVONNE
GRANTEE: CROSBY CHARLES D &

BUILDING NOTES

EXTRA FEATURES

LN	OB/XF CODE	DESCRIPTION	BLD	CAP	L	W	UNITS	UT	Adj R	ADJ UNIT PRICE	ORIG COND	YEAR ON	YEAR ACTUAL	Q	% COND	OB/XF MKT VALUE	NOTES
1	0500	FP-PRE FAB	0	100	0	0	1.00	UT	3,500.00	3,500.00	100	2005	2005	3	90	3,150	

BUILDING DIMENSIONS

FOP=[YR=2005] W22 STP=[YR=2005] N3 W4 S3 E4$ W23
BAS=[YR=2005] N9 W28 S21 FCP=[YR=2005] S26 E23 N16
FOP=[YR=2005] E4 N3 W4 S3$ N7 UST=[YR=2005] N3 W11 S3 E11$
W11 N3 W12$ E23 S7 E4 S3 W4 S11 E8 S12 E11 FOP=[YR=2005] S10
E8 STP=[YR=2005] S3 E5 N3 W5$ E12 N10 W20$ E31 N35 W30 N3 W9
S3 W2 N2 W2 S2 W2 N10$ S10 E2 N2 E2 S2 E2 N3 E9 S3 E30 N10$.

LAND DESCRIPTION

TOTAL OB/XF 3,150

LN	USE CODE	CLS	LAND USE DESCRIPTION	CAP	RD	LOC ZONE	FRONT	DEPTH	TOT LND UTS	UNIT TYPE	DT	DPTH FACT	% COND	TOT ADJ	UNIT PRICE	ADJ UNIT PRICE	LAND VALUE	OTHER ADJUSTMENTS AND NOTES	YEAR	DENSITY	DECL	FRZ	YR	CONSRV
1	000115	C	SFR ACRES	100	0005	OR	0.00	0.00	2.16	AC		1.00	1.00	1.00	35,000.00	35,000.00	75,600							

REVIEW DATE 08/14/2018 BY KBX Total Acres: 2.16 Total Land Value: 75,600 Market: 0 Agricultural: 0 Common: 75,600 PRINTED 08/02/2023 BY SYS