LOT 122
LIGHTHOUSE POINTE #2 PB 7/145

CANNON CHRISTOPHER L & ASHLEY
29879 SOUTHERN HERITAGE PL
YULEE, FL 32097

2023

41-3N-28-1250-0122-0000

BUILDING CHARACTERISTICS

ELEMENT	CD	CONSTRUCTION
Exterior Wall	10	ABOVE AVG 100
Roof Structur	08	IRREGULAR 100
Roof Cover	03	COMP SHNGL 100
Interior Wall	05	DRYWALL 100
Interior Floo	12	HARDWOOD 50
Interior Floo	14	CARPET 50
Air Condition	03	CENTRAL 100
Heating Type	04	AIR DUCTED 100
Bedrooms		3 100
Bathrooms		2.5 100
Frame	02	WOOD FRAME 100
Stories	1.5	1.5 100
Units		0 100
Occupancy	00	NONE 100
Quality	05	Quality Level 05
DOR CODE	0100	SINGLE FAMILY
MAP NUM		MKT AREA 04
NEIGHBORHOOD/LOC	4034.00	

AREA TYPE	TOTAL GROSS AREA	PCT OF BASE	TOT ADJ AREA	SUBAREA MARKET VALUE
BAS	1,688	100	1,688	268,384
FGR	666	55	366	58,192
FOP	72	30	22	3,498
FOP	240	30	72	11,447
FSP	240	40	96	15,264
FST	40	55	22	3,498
FST	40	55	22	3,498
FUS	576	100	576	91,581
STR	36	10	4	636
STR	36	10	4	636
TOTALS	3,949		3,030	481,755

MARKET ADJUSTMENTS

TYPE	MDL	EFF. AREA	TOT ADJ PTS	EFF. BASE RATE	REPL. COST NEW	AYB	EYB	ECON	FNCT		NORM	% COND
0500	01	3,030	113.8500	162.24	491,587	2017	2017	0	0	0	2.00	98.00

1 SFR CUST – 100% - 2022 Heated Area: 2264 HX Base Yr 2022

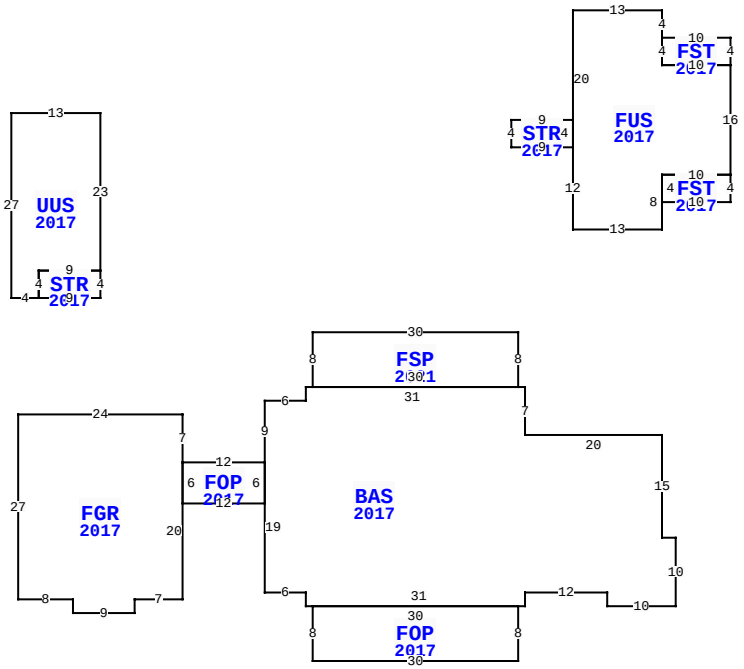

** This building has 11 Sub-Areas

29879 SOUTHERN HERITAGE PL, YULEE

BLD DATE		LGL DATE	
XF DATE		LAND DATE	06/15/2023 MLU
INC DATE		AG DATE	

NASSAU COUNTY PROPERTY

PAGE 1 of 1 4

VALUATION SUMMARY

VALUATION BY		STANDARD
Tax Group: 4	Tax Dist:	
BUILDING MARKET VALUE		481,755
TOTAL MARKET OB/XF VALUE		4,540
TOTAL LAND VALUE - MARKET		110,000
TOTAL MARKET VALUE		596,295
SOH/AGL Deduction		147,983
ASSESSED VALUE		448,312
TOTAL EXEMPTION VALUE	HX HB	50,000
BASE TAXABLE VALUE		398,312
TOTAL JUST VALUE		596,295
NCON VALUE		0
INCOME VALUE		
PREVIOUS YEAR MKT VALUE		453,766

PERMIT NUM	DESCRIPTION	AMT	ISSUED
22001552	ADDITION	5,688	01/27/2022
C1632894	CO ISSUED	0	05/25/2017
B1632894	NEW CONSTR	305,442	08/23/2016

SALES DATA

OFF RECORD Number	DATE	TYPE INST	Q U	V I	RSN CD	SALE PRICE
2459/1635	4/30/2021	WD	Q	I	01	485,000
GRANTOR: SLABAUGH WENDY C &						
GRANTEE: CANNON CHRISTOPHER						
2135/0651	7/24/2017	WD	Q	I	02	415,000
GRANTOR: TREVETT BUILDING SYST						
GRANTEE: SLABAUGH WENDY C &						

BUILDING NOTES

BUILDING DIMENSIONS

BAS=[YR=2017] W20 N7 W1 FSP=[YR=2021] N8 W30 S8 E30$ W31 S2 W6 S9 FOP=[YR=2017] W12 FGR=[YR=2017] N7 W24 S27 E8 S2 E9 N2 E7 N20$ S6 E12 N6$ S19 E6 S2 E1 FOP=[YR=2017] S8 E30 N8 W30$ E31 N2 E12 S2 E10 N10 W2 N15$ PTR= W95 N20 UUS=[YR=2017] N27 E13 S23 STR=[YR=2017] S4 W9 N4 E9$ W9 S4 W4$ S20 E95 $ PTR= N30 FUS=[YR=2017] W13 N12 STR=[YR=2017] W9 N4 E9 S4$ N20 E13 S4 FST=[YR=2017] E10 S4 W10 N4$ S4 E10 S16 FST=[YR=2017] S4 W10 N4 E10 $ W10 S8$ S30$.

EXTRA FEATURES

LN	OB/XF CODE	DESCRIPTION	BLD	CAP	L	W	UNITS	UT	Adj R	ADJ UNIT PRICE	ORIG COND	YEAR ON	YEAR ACTUAL	Q	% COND	OB/XF MKT VALUE	NOTES
1	0855	CONC PAVER	0	100	26	5	130.00	SF	10.00	10.00	100	2017	2017	3	97	1,261	
2	0810	CONCRETE A	0	100	26	20	520.00	SF	6.50	6.50	100	2017	2017	3	97	3,279	

LAND DESCRIPTION

TOTAL OB/XF 4,540

LN	USE CODE	CLS	LAND USE DESCRIPTION	CAP	RD	LOC ZONE	FRONT	DEPTH	TOT LND UTS	UNIT TYPE	DT	DPTH FACT	% COND	TOT ADJ	UNIT PRICE	ADJ UNIT PRICE	LAND VALUE	OTHER ADJUSTMENTS AND NOTES	YEAR	DENSITY	DECL	FRZ	YR	CONSRV
1	000136	C	SFR INT	100		PUD	0.00	0.00	1.00	LT		1.00	1.00	1.00	110,000.00	110,000.00	110,000							

REVIEW DATE 05/11/2022 BY TW Total Acres: 0.00 Total Land Value: 110,000 Market: 0 Agricultural: 0 Common: 110,000 PRINTED 08/02/2023 BY SYS