LOT 89
IN OR 2142/1025
LIGHTHOUSE POINTE #2 PB 7/145

PECK HENRY L II & DEANNA L
28300 GRANDVIEW MANOR
YULEE, FL 32097

2023

41-3N-28-1250-0089-0000

BUILDING CHARACTERISTICS

ELEMENT	CD	CONSTRUCTION
Exterior Wall	10	ABOVE AVG 100
Roof Structur	03	GABLE/HIP 100
Roof Cover	03	COMP SHNGL 100
Interior Wall	05	DRYWALL 100
Interior Floo	11	CLAY TILE 50
Interior Floo	14	CARPET 50
Air Condition	03	CENTRAL 100
Heating Type	04	AIR DUCTED 100
Bedrooms		4 100
Bathrooms		3 100
Frame	02	WOOD FRAME 100
Stories	1.5	1.5 100
Units		0 100
Occupancy	00	NONE 100
Quality	05	Quality Level 05

DOR CODE	0100	SINGLE FAMILY	
MAP NUM		MKT AREA	04
NEIGHBORHOOD/LOC	4034.00		

AREA TYPE	TOTAL GROSS AREA	PCT OF BASE	TOT ADJ AREA	SUBAREA MARKET VALUE
BAS	1,981	100	1,981	333,257
FGR	542	55	298	50,132
FOP	180	30	54	9,085
FOP	229	30	69	11,608
FST	14	55	8	1,346
FUS	324	100	324	54,506
STR	48	10	5	841
UOP	594	20	119	20,019
TOTALS	3,912		2,858	480,792

MARKET ADJUSTMENTS

TYPE	MDL	EFF. AREA	TOT ADJ PTS	EFF. BASE RATE	REPL. COST NEW	AYB	EYB	ECON	FNCT		NORM	% COND
0500	01	2,858	120.4610	171.66	490,604	2017	2017	0	0	0	2.00	98.00

1 SFR CUST – 100% - 2018 Heated Area: 2305 HX Base Yr 2018

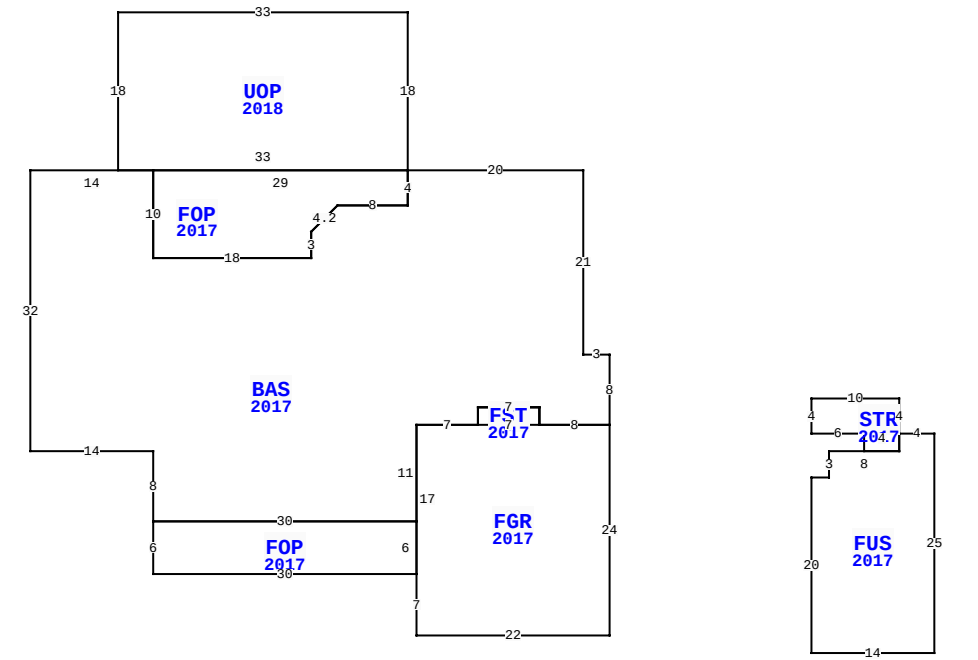

28300 GRANDVIEW MNR, YULEE

BLD DATE		LGL DATE	
XF DATE		LAND DATE	06/15/2023 MLU
INC DATE		AG DATE	

NASSAU COUNTY PROPERTY

PAGE 1 of 1 4

VALUATION SUMMARY

VALUATION BY		STANDARD
Tax Group: 4	Tax Dist:	
BUILDING MARKET VALUE		480,792
TOTAL MARKET OB/XF VALUE		17,310
TOTAL LAND VALUE - MARKET		110,000
TOTAL MARKET VALUE		608,102
SOH/AGL Deduction		259,210
ASSESSED VALUE		348,892
TOTAL EXEMPTION VALUE	HX HB VX	55,000
BASE TAXABLE VALUE		293,892
TOTAL JUST VALUE		608,102
NCON VALUE		0
INCOME VALUE		
PREVIOUS YEAR MKT VALUE		455,058

PERMIT NUM	DESCRIPTION	AMT	ISSUED
B1733658	CO ISSUED	0	08/22/2017
B1733658	NEW CONSTR	293,875	01/11/2017

SALES DATA

OFF RECORD Number	DATE	TYPE INST	Q U	V I	RSN CD	SALE PRICE
2142/1025	8/23/2017	WD	Q	I	01	376,900
GRANTOR: TREVETT BUILDING SYST						
GRANTEE: PECK HENRY L II & D						
2069/0940	9/01/2016	WD	U	V	30	60,000
GRANTOR: TREVETT BRETT M						
GRANTEE: TREVETT BUILDING SY						

BUILDING NOTES

BUILDING DIMENSIONS

BAS=[YR=2017] W20 UOP=[YR=2018] N18 W33 S18 E33$
FOP=[YR=2017] W29 S10 E18 N3 U3 R3 E8 N4$ S4 W8 D3 L3 S3
W18 N10 W14 S32 E14 S8 FOP=[YR=2017] S6 E30 FGR=[YR=2017]
S7E22 N24 W8 FST=[YR=2017] W7 N2 E7 S2$ N2 W7 S2 W7 S17$ N6
W30$ E30 N11 E7 N2 E7 S2 E8 N8 W3 N21$ PTR= E40 S30
FUS=[YR=2017] W4 STR=[YR=2017] N4 W10 S4 E6 S2 E4 N2 $ S2
W8 S3 W2 S20 E14 N25$ N30 W40$.

EXTRA FEATURES

LN	OB/XF CODE	DESCRIPTION	BLD	CAP	L	W	UNITS	UT	Adj R	ADJ UNIT PRICE	ORIG COND	YEAR ON	YEAR ACTUAL	Q	% COND	OB/XF MKT VALUE	NOTES
1	0855	CONC PAVER	0	100	26	4	104.00	SF	10.00	10.00	100	2017	2017	3	97	1,009	
2	0855	CONC PAVER	0	100	26	23	598.00	SF	10.00	10.00	100	2017	2017	3	97	5,801	
3	0855	CONC PAVER	0	100	95	3	285.00	SF	10.00	10.00	100	2018	2018	3	98	2,793	
4	0855	CONC PAVER	0	100	0	0	148.00	SF	10.00	10.00	100	2018	2018	3	98	1,450	
5	1134	LANDSCP BL	0	100	22	1	22.00	SF	3.00	3.00	100	2018	2018	3	99	65	
6	0600	SUMMER KIT	0	100	0	0	1.00	UT	6,250.00	6,250.00	100	2018	2018	3	86	5,375	
7	1076	TRELLIS A	0	100	11	11	121.00	SF	7.50	7.50	100	2018	2018	3	90	817	

LAND DESCRIPTION

TOTAL OB/XF 17,310

LN	USE CODE	CLS	LAND USE DESCRIPTION	CAP	RD	LOC ZONE	FRONT	DEPTH	TOT LND UTS	UNIT TYPE	DT	DPTH FACT	% COND	TOT ADJ	UNIT PRICE	ADJ UNIT PRICE	LAND VALUE	OTHER ADJUSTMENTS AND NOTES	YEAR	DENSITY	DECL	FRZ	YR	CONSRV
1	000136	C	SFR INT	100		PUD	0.00	0.00	1.00	LT		1.00	1.00	1.00	110,000.00	110,000.00	110,000							

REVIEW DATE 05/07/2018 BY KW Total Acres: 0.00 Total Land Value: 110,000 Market: 0 Agricultural: 0 Common: 110,000 PRINTED 08/02/2023 BY SYS