LOT 44
IN OR 2037/1904
LIGHTHOUSE POINTE PB 6/157

JOINER DANIELLE H & JUSTIN WILLIAM
29780 SOUTHERN HERITAGE PL
YULEE, FL 32097

2023

41-3N-28-1250-0044-0000

BUILDING CHARACTERISTICS

ELEMENT	CD	CONSTRUCTION
Exterior Wall	10	ABOVE AVG 100
Roof Structur	08	IRREGULAR 100
Roof Cover	03	COMP SHNGL 90
Roof Cover	11	SLATE 10
Interior Wall	05	DRYWALL 100
Interior Floo	11	CLAY TILE 60
Interior Floo	14	CARPET 40
Air Condition	03	CENTRAL 100
Heating Type	04	AIR DUCTED 100
Bedrooms		4 100
Bathrooms		3 100
Frame	02	WOOD FRAME 100
Stories	1.5	1.5 100
Units		0 100
Occupancy	00	NONE 100
Quality	05	Quality Level 05
DOR CODE	0100	SINGLE FAMILY
MAP NUM		MKT AREA 04
NEIGHBORHOOD/LOC	4034.00	

AREA TYPE	TOTAL GROSS AREA	PCT OF BASE	TOT ADJ AREA	SUBAREA MARKET VALUE
BAS	2,107	100	2,107	354,617
FGR	638	55	351	59,075
FOP	380	30	114	19,187
FST	24	55	13	2,188
FUS	432	100	432	72,708
PTO	210	5	10	1,683
STP	16	10	2	336
STP	21	10	2	336
STR	48	10	5	841
TOTALS	3,876		3,036	510,972

MARKET ADJUSTMENTS

TYPE	MDL	EFF. AREA	TOT ADJ PTS	EFF. BASE RATE	REPL. COST NEW	AYB	EYB	ECON	FNCT		NORM	% COND
0500	01	3,036	121.1364	172.62	524,074	2016	2016	0	0	0	2.50	97.50

1 SFR CUST – 100% - 2019 Heated Area: 2539 HX Base Yr 2019

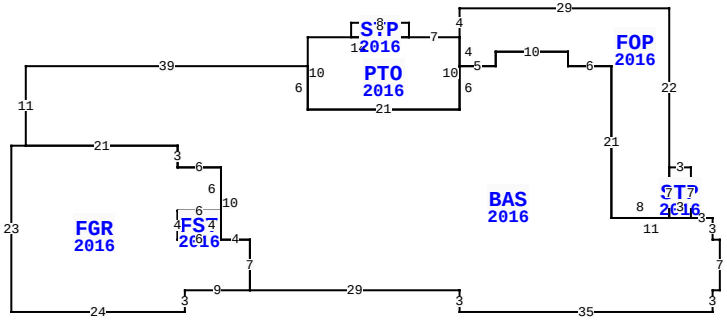

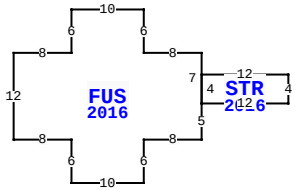

29780 SOUTHERN HERITAGE PL, YULEE

BLD DATE		LGL DATE	
XF DATE		LAND DATE	06/15/2023 MLU
INC DATE		AG DATE	

NASSAU COUNTY PROPERTY

PAGE 1 of 1 4

VALUATION SUMMARY

VALUATION BY		STANDARD
Tax Group: 4	Tax Dist:	
BUILDING MARKET VALUE		510,972
TOTAL MARKET OB/XF VALUE		7,294
TOTAL LAND VALUE - MARKET		110,000
TOTAL MARKET VALUE		628,266
SOH/AGL Deduction		241,049
ASSESSED VALUE		387,217
TOTAL EXEMPTION VALUE	HX HB	50,000
BASE TAXABLE VALUE		337,217
TOTAL JUST VALUE		628,266
NCON VALUE		0
INCOME VALUE		
PREVIOUS YEAR MKT VALUE		486,655

PERMIT NUM	DESCRIPTION	AMT	ISSUED
B1531039	CO ISSUED	0	03/30/2016
B1531039	NEW CONSTR	324,770	08/01/2015
B047144	NEW CONSTR	400,000	08/01/2000

SALES DATA

OFF RECORD Number	DATE	TYPE INST	Q / U	V / I	RSN CD	SALE PRICE
2037/1904	4/01/2016	SW	Q	I	01	381,500
GRANTOR: TREVETT BUILDING SYST						
GRANTEE: JOINER DANIELLE H &						
1941/1094	10/10/2014	SW	Q	V	01	30,000
GRANTOR: STAMPER WILLIE & VIVI						
GRANTEE: TREVETT BUILDING SY						

BUILDING NOTES

BUILDING DIMENSIONS

BAS=[YR=2016] N3 E1 N7 W1 N3 W3 STP=[YR=2016] N7 W3
FOP=[YR=2016] N22 W29 S4 PTO=[YR=2016] W7 STP=[YR=2016] N2
W8 S2 E8$ W14 S10 E21 N10$ S4 E5 N2 E10 S2 E6 S21 E8 N7$ S7
E3$ W11 N21 W6 N2 W10 S2 W5 S6 W21 N6 W39 S11 FGR=[YR=2016]
W2 S23 E24 N3 E9 N7 W4 FST=[YR=2016] N4 W6 S4 E6$ W6 N4 E6
N6 W6 N3 W21$ E21 S3 E6 S10 E4 S7 E29 S3 E35 $ PTR= S30
FUS=[YR=2016] W8 N6 W10 S6 W8 S12 E8 S6 E10 N6 E8 N5
STR=[YR=2016] E12 N4 W12 S4$ N7$ N30$.

EXTRA FEATURES

LN	OB/XF CODE	DESCRIPTION	BLD	CAP	L	W	UNITS	UT	Adj R	ADJ UNIT PRICE	ORIG COND	YEAR ON	YEAR ACTUAL	Q	% COND	OB/XF MKT VALUE	NOTES
1	0825	BRICK	0	100	23	3	69.00	SF	12.50	12.50	100	2016	2016	3	99	854	
2	0825	BRICK	0	100	16	7	112.00	SF	12.50	12.50	100	2016	2016	3	99	1,386	
3	0811	CONCRETE B	0	100	0	0	1,002.00	SF	5.20	5.20	100	2016	2016	3	97	5,054	

LAND DESCRIPTION

TOTAL OB/XF 7,294

LN	USE CODE	CLS	LAND USE DESCRIPTION	CAP	RD	LOC ZONE	FRONT	DEPTH	TOT LND UTS	UNIT TYPE	DT	DPTH FACT	% COND	TOT ADJ	UNIT PRICE	ADJ UNIT PRICE	LAND VALUE	OTHER ADJUSTMENTS AND NOTES	YEAR	DENSITY	DECL	FRZ	YR	CONSRV
1	000100	C	SFR	100			0.00	0.00	1.00	LT		1.00	1.00	1.00	110,000.00	110,000.00	110,000							

REVIEW DATE 08/16/2016 BY KW Total Acres: 0.00 Total Land Value: 110,000 Market: 0 Agricultural: 0 Common: 110,000 PRINTED 08/02/2023 BY SYS