LOT 31
IN OR 2534/1920
LIGHTHOUSE POINTE PB 6/157

HALULKO MATTHEW PAUL & SARAH B/BLAND-HALULKO SARAH
28781 GRANDVIEW MANOR
YULEE, FL 32097

2023

41-3N-28-1250-0031-0000

NASSAU COUNTY PROPERTY

BUILDING CHARACTERISTICS

ELEMENT	CD	CONSTRUCTION
Exterior Wall	10	ABOVE AVG 100
Roof Structur	08	IRREGULAR 100
Roof Cover	03	COMP SHNGL 100
Interior Wall	05	DRYWALL 100
Interior Floo	11	CLAY TILE 50
Interior Floo	14	CARPET 50
Air Condition	03	CENTRAL 100
Heating Type	04	AIR DUCTED 100
Bedrooms		4 100
Bathrooms		2.5 100
Frame	02	WOOD FRAME 100
Stories	1.	1. 100
Units		0 100
Occupancy	00	NONE 100
Quality	05	Quality Level 05
DOR CODE	0100	SINGLE FAMILY
MAP NUM		MKT AREA 04
NEIGHBORHOOD/LOC	4034.00	

AREA TYPE	TOTAL GROSS AREA	PCT OF BASE	TOT ADJ AREA	SUBAREA MARKET VALUE
BAS	3,012	100	3,012	479,230
FGR	896	55	493	78,439
FOP	115	30	34	5,410
FOP	374	30	112	17,820
PTO	21	5	1	160
PTO	42	5	2	318
PTO	54	5	3	478
UAT	160	10	16	2,545
TOTALS	4,674		3,673	584,400

MARKET ADJUSTMENTS

TYPE	MDL	EFF. AREA	TOT ADJ PTS	EFF. BASE RATE	REPL. COST NEW	AYB	EYB	ECON	FNCT		NORM	% COND
0500	01	3,673	113.3550	161.53	593,300	2018	2018	0	0	0	1.50	98.50

1 SFR CUST – 100% - 2023 Heated Area: 3012 HX Base Yr 2023

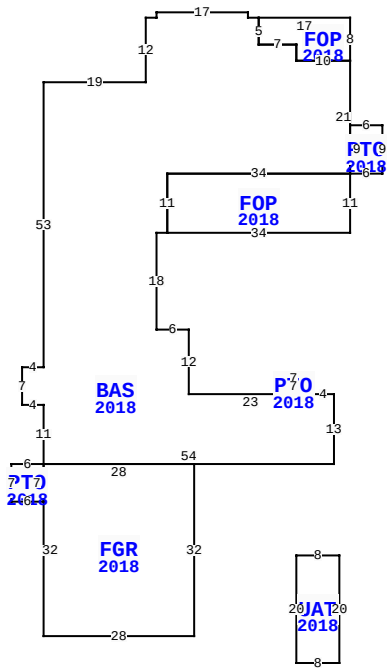

28781 GRANDVIEW MNR, YULEE

BLD DATE		LGL DATE	
XF DATE		LAND DATE	06/15/2023 MLU
INC DATE		AG DATE	

NASSAU COUNTY PROPERTY — VALUATION SUMMARY

VALUATION BY		STANDARD
Tax Group: 4	Tax Dist:	
BUILDING MARKET VALUE		584,400
TOTAL MARKET OB/XF VALUE		9,471
TOTAL LAND VALUE - MARKET		110,000
TOTAL MARKET VALUE		703,871
SOH/AGL Deduction		0
ASSESSED VALUE		703,871
TOTAL EXEMPTION VALUE	HX HB	50,000
BASE TAXABLE VALUE		653,871
TOTAL JUST VALUE		703,871
NCON VALUE		0
INCOME VALUE		
PREVIOUS YEAR MKT VALUE		557,068

PERMIT NUM	DESCRIPTION	AMT	ISSUED
B1800592	CO ISSUED	0	12/27/2018
B1800592	NEW CONSTR	465,821	01/18/2018

SALES DATA

OFF RECORD Number	DATE	TYPE INST	Q U	V I	RSN CD	SALE PRICE
2534/1920	1/31/2022	WD	Q	I	01	825,000
GRANTOR: GAY MICHAEL J & SANDR						
GRANTEE: HALULKO MATTHEW PAU						
2166/0679	12/22/2017	QC	U	V	11	100
GRANTOR: GAY SANDRA						
GRANTEE: GAY MICHAEL J & SAN						

BUILDING NOTES

BUILDING DIMENSIONS

FOP=[YR=2018] W17 BAS=[YR=2018] W2 N1 W17 S1 W2 S12 W19 S53 W4 S7 E4 S11 PTO=[YR=2018] W6 S7 E6 N7$ FGR=[YR=2018] S32 E28 N32 W28$ E54 N13 W4 PTO=[YR=2018] N3 W7 S3 E7$ W23 N12 W6 N18 E2 FOP=[YR=2018] E34 N11 W34 S11$ N11 E34 PTO=[YR=2018] E6 N9 W6 S9$ N21 W10 N3 W7 N5$ S5 E7 S3 E10 N8$ PTR= W10 S100 UAT=[YR=2018] S20 E8 N20 W8$ N100 E10$.

EXTRA FEATURES

LN	OB/XF CODE	DESCRIPTION	BLD	CAP	L	W	UNITS	UT	Adj R	ADJ UNIT PRICE	ORIG COND	YEAR ON	YEAR ACTUAL	Q	% COND	OB/XF MKT VALUE	NOTES
1	0500	FP-PRE FAB	0	100	0	0	1.00	UT	3,500.00	3,500.00	100	2018	2018	3	99	3,465	
2	0855	CONC PAVER	0	100	19	4	76.00	SF	10.00	10.00	100	2018	2018	3	98	745	
3	0812	CONCRETE C	0	100	0	0	1,342.00	SF	4.00	4.00	100	2018	2018	3	98	5,261	

LAND DESCRIPTION

TOTAL OB/XF 9,471

LN	USE CODE	CLS	LAND USE DESCRIPTION	CAP	RD	LOC ZONE	FRONT	DEPTH	TOT LND UTS	UNIT TYPE	DT	DPTH FACT	% COND	TOT ADJ	UNIT PRICE	ADJ UNIT PRICE	LAND VALUE	OTHER ADJUSTMENTS AND NOTES	YEAR	DENSITY	DECL	FRZ	YR	CONSRV
1	000100	C	SFR	100			0.00	0.00	1.00	LT		1.00	1.00	1.00	110,000.00	110,000.00	110,000							

REVIEW DATE 01/08/2019 BY KW Total Acres: 0.00 Total Land Value: 110,000 Market: 0 Agricultural: 0 Common: 110,000 PRINTED 08/02/2023 BY SYS