LOT 47
VILLAGES OF WOODBRIDGE PH 3
PBK 8/273

VAN CAMP COLBY D & VICTORIA Y
95443 WOODBRIDGE PKWY
FERNANDINA BEACH, FL 32034

2023

41-2N-28-1140-0047-0000

BUILDING CHARACTERISTICS

ELEMENT	CD	CONSTRUCTION
Exterior Wall	31	HARDIE BRD 100
Roof Structur	03	GABLE/HIP 100
Roof Cover	03	COMP SHNGL 100
Interior Wall	05	DRYWALL 100
Interior Floo	11	CLAY TILE 50
Interior Floo	14	CARPET 50
Air Condition	03	CENTRAL 100
Heating Type	04	AIR DUCTED 100
Bedrooms		5 100
Bathrooms		2.5 100
Frame	02	WOOD FRAME 100
Stories	2.	2. 100
Units		0 100
Occupancy	00	NONE 100
Quality	03	Quality Level 03

DOR CODE 0100 SINGLE FAMILY
MAP NUM | MKT AREA 04
NEIGHBORHOOD/LOC 4068.100

AREA TYPE	TOTAL GROSS AREA	PCT OF BASE	TOT ADJ AREA	SUBAREA MARKET VALUE
BAS	1,138	100	1,138	109,030
FGR	470	55	258	24,719
FOP	20	30	6	575
FOP	150	30	45	4,311
FUS	1,502	100	1,502	143,905
STR	70	10	7	671
TOTALS	3,350		2,956	283,210

MARKET ADJUSTMENTS

TYPE	MDL	EFF. AREA	TOT ADJ PTS	EFF. BASE RATE	REPL. COST NEW	AYB	EYB	ECON	FNCT		NORM	% COND
0100	01	2,956	106.6900	96.29	284,633	2020	2020	0	0	0	0.50	99.50

1 SINGLE FAM – 100% - 2021 Heated Area: 2640 HX Base Yr 2021

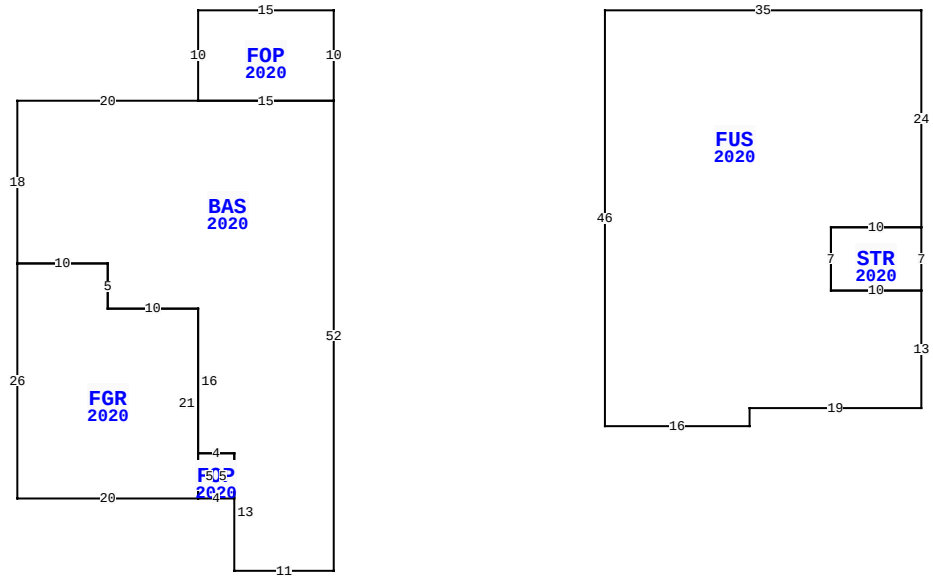

95443 WOODBRIDGE PKWY, FERNANDINA BEACH

BLD DATE		LGL DATE	
XF DATE		LAND DATE	05/18/2023 MLU
INC DATE		AG DATE	

NASSAU COUNTY PROPERTY

PAGE 1 of 1 4

VALUATION SUMMARY

VALUATION BY		STANDARD
Tax Group: 4	Tax Dist:	
BUILDING MARKET VALUE		283,210
TOTAL MARKET OB/XF VALUE		3,470
TOTAL LAND VALUE - MARKET		75,000
TOTAL MARKET VALUE		361,680
SOH/AGL Deduction		92,667
ASSESSED VALUE		269,013
TOTAL EXEMPTION VALUE	HX HB VX	55,000
BASE TAXABLE VALUE		214,013
TOTAL JUST VALUE		361,680
NCON VALUE		0
INCOME VALUE		
PREVIOUS YEAR MKT VALUE		315,129

PERMIT NUM	DESCRIPTION	AMT	ISSUED
C205779	CO ISSUED	0	07/06/2020
B2001506	NEW CONSTR	350,863	03/01/2020

SALES DATA

OFF RECORD Number	DATE	TYPE INST	Q U	V I	RSN CD	SALE PRICE
2378/1530	7/17/2020	SW	Q	I	01	272,100
GRANTOR: RICHMOND AMERICAN HOM						
GRANTEE: VAN CAMP COLBY D &						
2264/0036	3/25/2019	SW	Q	V	05	566,000
GRANTOR: WOODBRIDGE NASSAU LLC						
GRANTEE: RICHMOND AMERICAN H						

BUILDING NOTES

BUILDING DIMENSIONS

FOP=[YR=2020] W15 S10 BAS=[YR=2020] W20 S18 FGR=[YR=2020] S26 E20 FOP=[YR=2020] E4N5 W4 S5 $ N21 W10 N5 W10 $ E10 S5 E10 S16 E4 S13 E11 N52 W15 $ E15 N10 $PTR= E30 FUS=[YR=2020] E35 S24 STR=[YR=2020] S7 W10 N7 E10 $ W10 S7 E10 S13 W19 S2 W16 N46 $ W30 $.

EXTRA FEATURES

LN	OB/XF CODE	DESCRIPTION	BLD	CAP	L	W	UNITS	UT	Adj R	ADJ UNIT PRICE	ORIG COND	YEAR ON	YEAR ACTUAL	Q	% COND	OB/XF MKT VALUE	NOTES
1	0811	CONCRETE B	0	100	0	0	674.00	SF	5.20	5.20	100	2020	2020	3	99	3,470	

LAND DESCRIPTION

TOTAL OB/XF 3,470

LN	USE CODE	CLS	LAND USE DESCRIPTION	CAP	RD	LOC ZONE	FRONT	DEPTH	TOT LND UTS	UNIT TYPE	DT	DPTH FACT	% COND	TOT ADJ	UNIT PRICE	ADJ UNIT PRICE	LAND VALUE	OTHER ADJUSTMENTS AND NOTES	YEAR	DENSITY	DECL	FRZ	YR	CONSRV
1	000100	C	SFR	100			0.00	0.00	1.00	LT		1.00	1.00	1.00	75,000.00	75,000.00	75,000							

REVIEW DATE 08/14/2020 BY RK Total Acres: 0.00 Total Land Value: 75,000 Market: 0 Agricultural: 0 Common: 75,000 PRINTED 08/02/2023 BY SYS