LOT 7
VILLAGES OF WOODBRIDGE PH 3
PBK 8/273

BORGATELLO SERGIO A
95414 WOODBRIDGE PKWY
FERNANDINA BEACH, FL 32034

2023

41-2N-28-1140-0007-0000

NASSAU COUNTY PROPERTY

BUILDING CHARACTERISTICS

ELEMENT	CD	CONSTRUCTION
Exterior Wall	31	HARDIE BRD 100
Roof Structur	03	GABLE/HIP 100
Roof Cover	03	COMP SHNGL 100
Interior Wall	05	DRYWALL 100
Interior Floo	13	LVT/LAMNT 60
Interior Floo	14	CARPET 40
Air Condition	03	CENTRAL 100
Heating Type	04	AIR DUCTED 100
Bedrooms		3 100
Bathrooms		2 100
Frame	02	WOOD FRAME 100
Stories	1.	1. 100
Units		0 100
Occupancy	00	NONE 100
Quality	03	Quality Level 03

DOR CODE 0100 SINGLE FAMILY
MAP NUM | MKT AREA 04
NEIGHBORHOOD/LOC 4068.100

AREA TYPE	TOTAL GROSS AREA	PCT OF BASE	TOT ADJ AREA	SUBAREA MARKET VALUE
BAS	1,601	100	1,601	156,671
FGR	581	55	320	31,315
FOP	48	30	14	1,370
PTO	240	5	12	1,174
TOTALS	2,470		1,947	190,530

MARKET ADJUSTMENTS

TYPE	MDL	EFF. AREA	TOT ADJ PTS	EFF. BASE RATE	REPL. COST NEW	AYB	EYB	ECON	FNCT		NORM	% COND
0100	01	1,947	108.9760	98.35	191,487	2020	2020	0	0	0	0.50	99.50

1 SINGLE FAM – 100% - 2021 Heated Area: 1601 HX Base Yr 2021

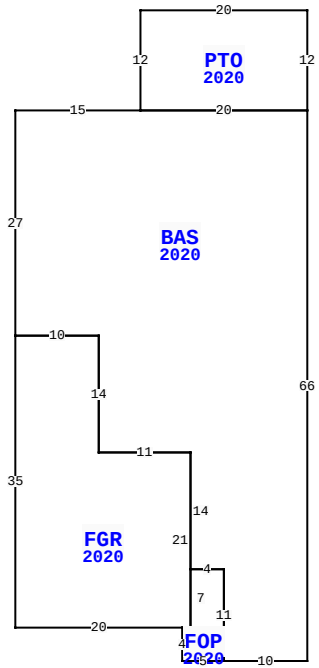

95414 WOODBRIDGE PKWY, FERNANDINA BEACH

BLD DATE		LGL DATE	
XF DATE		LAND DATE	05/18/2023 MLU
INC DATE		AG DATE	

VALUATION SUMMARY

VALUATION BY		STANDARD
Tax Group: 4	Tax Dist:	
BUILDING MARKET VALUE		190,530
TOTAL MARKET OB/XF VALUE		9,226
TOTAL LAND VALUE - MARKET		75,000
TOTAL MARKET VALUE		274,756
SOH/AGL Deduction		130,571
ASSESSED VALUE		144,185
TOTAL EXEMPTION VALUE	HX HB	50,000
BASE TAXABLE VALUE		94,185
TOTAL JUST VALUE		274,756
NCON VALUE		0
INCOME VALUE		
PREVIOUS YEAR MKT VALUE		236,828

PERMIT NUM	DESCRIPTION	AMT	ISSUED
C204656	CO ISSUED	0	11/19/2020
B204656	NEW CONSTR	225,646	06/17/2020

SALES DATA

OFF RECORD Number	DATE	TYPE INST	Q U	V I	RSN CD	SALE PRICE
2412/1084	11/25/2020	SW	Q	I	02	247,600
GRANTOR: RICHMOND AMERICAN HOM						
GRANTEE: BORGATELLO SERGIO A						
2327/0137	12/18/2019	SW	Q	V	05	503,300
GRANTOR: WOODBRIDGE NASSAU LLC						
GRANTEE: RICHMOND AMERICAN H						

BUILDING NOTES

BUILDING DIMENSIONS

PTO=[YR=2020] W20 S12 BAS=[YR=2020] W15 S27 FGR=[YR=2020] S35 E20 FOP=[YR=2020] S4 E5 N11 W4 S7 W1$ E1 N21 W11 N14 W10$ E10 S14 E11 S14 E4 S11 E10 N66 W20$ E20 N12$.

EXTRA FEATURES

LN	OB/XF CODE	DESCRIPTION	BLD	CAP	L	W	UNITS	UT	Adj R	ADJ UNIT PRICE	ORIG COND	YEAR ON	YEAR ACTUAL	Q	% COND	OB/XF MKT VALUE	NOTES
1	0810	CONCRETE A	0	100	6	3	18.00	SF	6.50	6.50	100	2020	2020	3	99	116	
2	0811	CONCRETE B	0	100	0	0	616.00	SF	5.20	5.20	100	2020	2020	3	99	3,171	
3	0476	VF 6 SBPL	0	100	0	0	180.00	LF	32.00	32.00	100	2020	2020	3	98	5,645	
4	0470	VNYL GATE	0	100	0	0	1.00	UT	300.00	300.00	100	2020	2020	3	98	294	

LAND DESCRIPTION

TOTAL OB/XF 9,226

LN	USE CODE	CLS	LAND USE DESCRIPTION	CAP	RD	LOC ZONE	FRONT	DEPTH	TOT LND UTS	UNIT TYPE	DT	DPTH FACT	% COND	TOT ADJ	UNIT PRICE	ADJ UNIT PRICE	LAND VALUE	OTHER ADJUSTMENTS AND NOTES	YEAR	DENSITY	DECL	FRZ	YR	CONSRV
1	000100	C	SFR	100			0.00	0.00	1.00	LT		1.00	1.00	1.00	75,000.00	75,000.00	75,000							

REVIEW DATE 02/16/2021 BY KW Total Acres: 0.00 Total Land Value: 75,000 Market: 0 Agricultural: 0 Common: 75,000 PRINTED 08/02/2023 BY SYS