PT FRED MCMURRAN GRANT
SEC 40-3N-23E
ESMTS OR 633/334 (EX PT IN R/W

STANATH DEALAU/
P O BOX 983
HILLIARD, FL 32046

2023

40-3N-23-0000-0004-0010

BUILDING CHARACTERISTICS

ELEMENT	CD	CONSTRUCTION
Exterior Wall	17	CB STUCCO 100
Roof Structur	03	GABLE/HIP 100
Roof Cover	03	COMP SHNGL 100
Interior Wall	04	PLYWOOD 60
Interior Wall	05	DRYWALL 40
Interior Floo	14	CARPET 60
Interior Floo	11	CLAY TILE 40
Air Condition	03	CENTRAL 100
Heating Type	04	AIR DUCTED 100
Bedrooms		3 100
Bathrooms		2 100
Frame	03	MASONRY 100
Stories	1.	1. 100
Units		0 100
BUD8 Adjustme	04	DIST 01 100
Occupancy	00	NONE 100
Quality	05	Quality Level 05
DOR CODE	5500	TIMBERLAND 80-89
MAP NUM		MKT AREA 09
NEIGHBORHOOD/LOC	9001.00	

AREA TYPE	TOTAL GROSS AREA	PCT OF BASE	TOT ADJ AREA	SUBAREA MARKET VALUE
BAS	1,620	100	1,620	173,094
BAS	400	100	400	42,739
BAS	560	100	560	59,835
BAS	592	100	592	63,254
FOP	200	30	60	6,411
FOP	224	30	67	7,158
FOP	582	30	175	18,698
UST	78	45	35	3,740
TOTALS	4,256		3,509	374,930

MARKET ADJUSTMENTS

TYPE	MDL	EFF. AREA	TOT ADJ PTS	EFF. BASE RATE	REPL. COST NEW	AYB	EYB	ECON	FNCT		NORM	% COND
0900	01	3,509	107.1180	127.20	446,345	1973	1990	0	0	0	16.00	84.00

1 SNGL FAM – 100% - 2017 Heated Area: 3172 HX Base Yr 2017

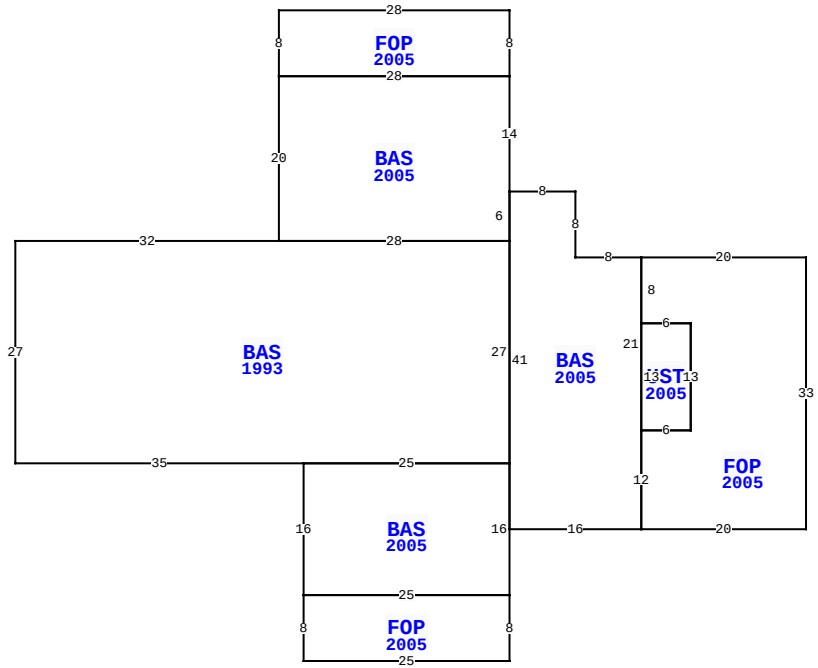

775 CARLEE LN, HILLIARD

BLD DATE		LGL DATE	
XF DATE		LAND DATE	07/28/2021 MF
INC DATE		AG DATE	

NASSAU COUNTY PROPERTY

PAGE 1 of 1 4

VALUATION SUMMARY

VALUATION BY		STANDARD
Tax Group: 4	Tax Dist:	
BUILDING MARKET VALUE		374,930
TOTAL MARKET OB/XF VALUE		38,478
TOTAL LAND VALUE - MARKET		163,000
TOTAL MARKET VALUE		452,982
SOH/AGL Deduction		241,537
ASSESSED VALUE		211,445
TOTAL EXEMPTION VALUE	HX HB	50,000
BASE TAXABLE VALUE		161,445
TOTAL JUST VALUE		576,408
NCON VALUE		0
INCOME VALUE		
PREVIOUS YEAR MKT VALUE		338,005

PERMIT NUM	DESCRIPTION	AMT	ISSUED
18006430	SHINGLES	10,000	06/21/2018
17004084	GARAGE	0	07/03/2017
B17780	OTHER	0	05/01/2006
WE00440	OTHER	0	02/01/2006

SALES DATA

OFF RECORD Number	DATE	TYPE INST	Q U	V I	RSN CD	SALE PRICE
9999/9999	3/08/2013	CN	U	I	11	100
GRANTOR: HOWARD ROBERT L TRUST						
GRANTEE: STANATH DEALAU						
2482/0885	7/23/2021	CN	U	I	11	100
GRANTOR: STANATH DEALAU						
GRANTEE: STANATH DEALAU						

BUILDING NOTES

BUILDING DIMENSIONS

FOP=[YR=2005] W20 BAS=[YR=2005] W8 N8 W8 BAS=[YR=2005] N14 FOP=[YR=2005] N8 W28 S8 E28 $ W28 S20 BAS=[YR=1993] W32 S27 E35 BAS=[YR=2005] S16 FOP=[YR=2005] S8 E25 N8 W25 $ E25 N16 W25 $ E25 N27 W28 $ E28 N6 $S41 E16 N12 UST=[YR=2005] E6 N13 W6 S13 $ N21 $ S8 E6 S13 W6 S12/E20/N33$.

EXTRA FEATURES

LN	OB/XF CODE	DESCRIPTION	BLD	CAP	L	W	UNITS	UT	Adj R	ADJ UNIT PRICE	ORIG COND	YEAR ON	YEAR ACTUAL	Q	% COND	OB/XF MKT VALUE	NOTES
1	0200	BARN WD 0-	0	100	0	0	1,600.00	SF	12.00	12.00	100	1980	1980	3	20	3,840	
2	0350	CARPORT WD	0	100	0	0	938.00	SF	13.00	13.00	100	1985	1985	3	20	2,439	
3	0810	CONCRETE A	0	100	0	0	90.00	SF	6.50	6.50	100	1980	1980	3	35	205	
4	0940	SHEDS/PORT	0	100	0	0	582.00	SF	30.00	30.00	100	1980	1980	3	20	3,492	
5	0811	CONCRETE B	0	100	0	0	985.00	SF	5.20	5.20	100	1990	1990	3	62	3,176	
6	0937	WELL	0	0	0	0	1.00	UT	6,000.00	6,000.00	100	1990	1990	3	100	6,000	
7	0811	CONCRETE B	0	100	0	0	864.00	SF	5.20	5.20	100	2003	2003	3	84	3,774	
8	0681	POLE SHED	0	100	48	24	1,152.00	SF	15.00	15.00	100	2018	2018	3	90	15,552	

LAND DESCRIPTION

TOTAL OB/XF 38,478

LN	USE CODE	CLS	LAND USE DESCRIPTION	CAP	RD	LOC ZONE	FRONT	DEPTH	TOT LND UTS	UNIT TYPE	DT	DPTH FACT	% COND	TOT ADJ	UNIT PRICE	ADJ UNIT PRICE	LAND VALUE	OTHER ADJUSTMENTS AND NOTES	YEAR	DENSITY	DECL	FRZ	YR	CONSRV
1	005000	C	RURAL HOME	100	0007	OR	0.00	0.00	1.00	AC		1.00	1.00	1.00	30,000.00	30,000.00	30,000							
2	005500	A	TIMBER 2 SI	0			0.00	0.00	12.74	AC		1.00	1.00	1.00	550.00	550.00	7,007							
3	005600	A	TIMBER 3 SI	0			0.00	0.00	6.26	AC		1.00	1.00	1.00	410.00	410.00	2,567							
4	009910	M	MKT.VAL.AG	0			0.00	0.00	19.00	AC		1.00	1.00	1.00	7,000.00	7,000.00	133,000							

REVIEW DATE 10/09/2017 BY TW Total Acres: 20.00 Total Land Value: 39,574 Market: 133,000 Agricultural: 9,574 Common: 30,000 PRINTED 08/02/2023 BY SYS