LOT 11
IN OR 2144/1259
WOODBRIER PHASE 1 PBK 8/154

MCCRACKEN JULIE
504 BEECH STREET
FERNANDINA BEACH, FL 32034

2023

40-2N-28-2500-0011-0000

NASSAU COUNTY PROPERTY

BUILDING CHARACTERISTICS

ELEMENT	CD	CONSTRUCTION
Exterior Wall	31	HARDIE BRD 70
Exterior Wall	16	WD FR STUC 30
Roof Structur	03	GABLE/HIP 100
Roof Cover	03	COMP SHNGL 100
Interior Wall	05	DRYWALL 100
Interior Floo	11	CLAY TILE 50
Interior Floo	14	CARPET 50
Air Condition	03	CENTRAL 100
Heating Type	04	AIR DUCTED 100
Bedrooms		4 100
Bathrooms		3 100
Frame	02	WOOD FRAME 100
Stories	1.5	1.5 100
Units		0 100
Occupancy	00	NONE 100
Quality	06	Quality Level 06

DOR CODE	0100	SINGLE FAMILY	
MAP NUM		MKT AREA	04
NEIGHBORHOOD/LOC	4035.00		

AREA TYPE	TOTAL GROSS AREA	PCT OF BASE	TOT ADJ AREA	SUBAREA MARKET VALUE
BAS	1,660	100	1,660	194,122
FGR	461	55	254	29,703
FOP	157	30	47	5,496
FSP	104	40	42	4,911
FST	15	55	8	935
FUS	360	100	360	42,099
STR	48	10	5	585
TOTALS	2,805		2,376	277,851

MARKET ADJUSTMENTS

TYPE	MDL	EFF. AREA	TOT ADJ PTS	EFF. BASE RATE	REPL. COST NEW	AYB	EYB	ECON	FNCT		NORM	% COND
0100	01	2,376	132.4225	119.51	283,956	2017	2017	0	0	0	2.15	97.85

1 SINGLE FAM – 0% - 0 Heated Area: 2020 HX Base Yr

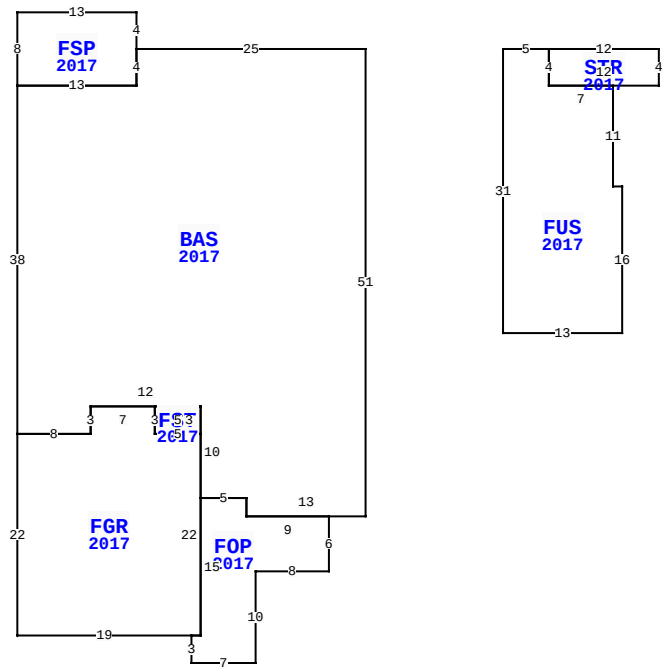

94080 WOODBRIER CR, FERNANDINA BEACH

BLD DATE		LGL DATE	
XF DATE		LAND DATE	05/17/2023 MLU
INC DATE		AG DATE	

VALUATION SUMMARY

VALUATION BY	STANDARD
Tax Group: 4	Tax Dist:
BUILDING MARKET VALUE	277,851
TOTAL MARKET OB/XF VALUE	3,445
TOTAL LAND VALUE - MARKET	75,000
TOTAL MARKET VALUE	356,296
SOH/AGL Deduction	72,697
ASSESSED VALUE	283,599
TOTAL EXEMPTION VALUE	0
BASE TAXABLE VALUE	283,599
TOTAL JUST VALUE	356,296
NCON VALUE	0
INCOME VALUE	
PREVIOUS YEAR MKT VALUE	299,925

PERMIT NUM	DESCRIPTION	AMT	ISSUED
B1703277	CO ISSUED	0	07/25/2017
B1703277	NEW CONSTR	255,915	04/13/2017

SALES DATA

OFF RECORD Number	DATE	TYPE INST	Q / U	V / I	RSN CD	SALE PRICE
2144/1259	8/31/2017	WD	Q	I	01	254,100

GRANTOR: SEDA CONSTRUCTION COM

GRANTEE: MCCRACKEN JULIE

BUILDING NOTES

BUILDING DIMENSIONS

BAS=[YR=2017] W25 FSP=[YR=2017] N4 W13 S8 E13 N4$ S4 W13 S38 FGR=[YR=2017] S22 E19 FOP=[YR=2017] S3 E7 N10 E8 N6 W9 N2 W5 S15 W1$ E1 N22 FST=[YR=2017] N3 W5 S3 E5$ W5 N3 W7 S3 W8$ E8 N3 E12 S10 E5 S2 E13 N51$ PTR=E15 FUS=[YR=2017] E5 STR=[YR=2017] E12 S4 W12 N4$ S4 E7 S11 E1 S16 W13 N31$ W15$.

EXTRA FEATURES

LN	OB/XF CODE	DESCRIPTION	BLD	CAP	L	W	UNITS	UT	Adj R	ADJ UNIT PRICE	ORIG COND	YEAR ON	YEAR ACTUAL	Q	% COND	OB/XF MKT VALUE	NOTES
1	0811	CONCRETE B	0	0	0	0	653.00	SF	5.20	5.20	100	2017	2017	3	97	3,294	
2	0810	CONCRETE A	0	0	0	0	24.00	SF	6.50	6.50	100	2017	2017	3	97	151	

LAND DESCRIPTION

TOTAL OB/XF 3,445

LN	USE CODE	CLS	LAND USE DESCRIPTION	CAP	RD	LOC ZONE	FRONT	DEPTH	TOT LND UTS	UNIT TYPE	DT	DPTH FACT	% COND	TOT ADJ	UNIT PRICE	ADJ UNIT PRICE	LAND VALUE	OTHER ADJUSTMENTS AND NOTES	YEAR	DENSITY	DECL	FRZ	YR	CONSRV
1	000100	C	SFR	0			0.00	0.00	1.00	LT		1.00	1.00	1.00	75,000.00	75,000.00	75,000							

REVIEW DATE 11/09/2017 BY DJ Total Acres: 0.00 Total Land Value: 75,000 Market: 0 Agricultural: 0 Common: 75,000 PRINTED 08/02/2023 BY SYS