LOT 36
VILLAGES OF WOODBRIDGE #2
PB 7/229

HARGROVE CHERYL I L/E/
95160 VENTURES COURT
FERNANDINA BEACH, FL 32034

**2023**

**40-2N-28-225V-0002-0360**

## BUILDING CHARACTERISTICS

| ELEMENT | CD | CONSTRUCTION |
|---|---|---|
| Exterior Wall | 16 | WD FR STUC 100 |
| Roof Structur | 03 | GABLE/HIP 100 |
| Roof Cover | 03 | COMP SHNGL 100 |
| Interior Wall | 05 | DRYWALL 100 |
| Interior Floo | 12 | HARDWOOD 50 |
| Interior Floo | 14 | CARPET 50 |
| Air Condition | 03 | CENTRAL 100 |
| Heating Type | 04 | AIR DUCTED 100 |
| Bedrooms | | 3 100 |
| Bathrooms | | 2.5 100 |
| Frame | 02 | WOOD FRAME 100 |
| Stories | 2. | 2. 100 |
| Units | | 0 100 |
| Occupancy | 00 | NONE 100 |
| Quality | 03 | Quality Level 03 |
| DOR CODE | 0100 | SINGLE FAMILY |
| MAP NUM | | MKT AREA 04 |
| NEIGHBORHOOD/LOC | 4068.00 | |

| AREA TYPE | TOTAL GROSS AREA | PCT OF BASE | TOT ADJ AREA | SUBAREA MARKET VALUE |
|---|---|---|---|---|
| BAL | 117 | 15 | 18 | 1,514 |
| BAS | 1,793 | 100 | 1,793 | 150,794 |
| FGR | 529 | 55 | 291 | 24,474 |
| FOP | 16 | 30 | 5 | 421 |
| FOP | 149 | 30 | 45 | 3,784 |
| FUS | 906 | 100 | 906 | 76,196 |
| PTO | 24 | 5 | 1 | 84 |
| UOP | 234 | 20 | 47 | 3,953 |
| TOTALS | 3,768 | | 3,106 | 261,218 |

## MARKET ADJUSTMENTS

| TYPE | MDL | EFF. AREA | TOT ADJ PTS | EFF. BASE RATE | REPL. COST NEW | AYB | EYB | ECON | FNCT | | NORM | % COND |
|---|---|---|---|---|---|---|---|---|---|---|---|---|
| 0100 | 01 | 3,106 | 100.7400 | 90.92 | 282,398 | 2007 | 2007 | 0 | 0 | 0 | 7.50 | 92.50 |

1 SINGLE FAM – 100% - 2017 Heated Area: 2699 HX Base Yr 2017

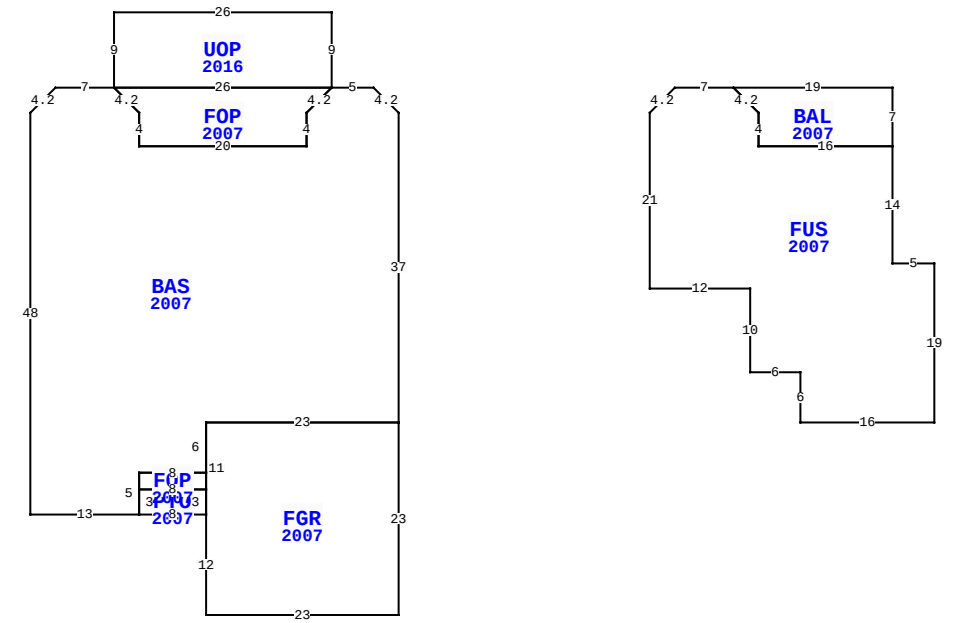


95160 VENTURES CT, FERNANDINA BEACH

| | | | |
|---|---|---|---|
| BLD DATE | | LGL DATE | |
| XF DATE | | LAND DATE | 05/18/2023 MLU |
| INC DATE | | AG DATE | |

## NASSAU COUNTY PROPERTY

PAGE 1 of 1 4

### VALUATION SUMMARY

| | | |
|---|---|---|
| VALUATION BY | | STANDARD |
| Tax Group: 4 | Tax Dist: | |
| BUILDING MARKET VALUE | | 261,218 |
| TOTAL MARKET OB/XF VALUE | | 10,420 |
| TOTAL LAND VALUE - MARKET | | 75,000 |
| TOTAL MARKET VALUE | | 346,638 |
| SOH/AGL Deduction | | 116,934 |
| ASSESSED VALUE | | 229,704 |
| TOTAL EXEMPTION VALUE | HX HB | 50,000 |
| BASE TAXABLE VALUE | | 179,704 |
| TOTAL JUST VALUE | | 346,638 |
| NCON VALUE | | 0 |
| INCOME VALUE | | |
| PREVIOUS YEAR MKT VALUE | | 311,703 |

| PERMIT NUM | DESCRIPTION | AMT | ISSUED |
|---|---|---|---|
| C20007 | CO ISSUED | 0 | 06/01/2007 |
| B20007 | NEW CONSTR | 330,565 | 06/01/2007 |
| E19393 | ELEC OTHER | 1,900 | 06/01/2007 |
| M13016 | MECH OTHER | 0 | 06/01/2007 |
| P12474 | OTHER | 0 | 06/01/2007 |
| R10424 | REPAIR/RRF | 1,500 | 06/01/2007 |

## SALES DATA

| OFF RECORD Number | DATE | TYPE INST | Q U | V I | RSN CD | SALE PRICE |
|---|---|---|---|---|---|---|
| 2380/1380 | 7/31/2020 | QC | U | I | 11 | 100 |
| GRANTOR: HARGROVE CHERYL I | | | | | | |
| GRANTEE: HARGROVE TRAVIS S | | | | | | |
| 2057/0147 | 6/01/2016 | WD | U | I | 11 | 100 |
| GRANTOR: ANDREE WADE | | | | | | |
| GRANTEE: HARGROVE CHERYL I | | | | | | |

## BUILDING NOTES

## BUILDING DIMENSIONS

BAS=[YR=2007] U3 L3 W5 UOP=[YR=2016] N9 W26 S9 E26$
FOP=[YR=2007] W26 D3 R3 S4 E20 N4 U3 R3 $ D3 L3 S4 W20
N4 U3 L3 W7 D3 L3 S48 E13 PTO=[YR=2007] E8 FGR=[YR=2007]
S12 E23 N23 W23 S11$ N3 FOP=[YR=2007] N2 W8 S2 E8 $ W8 S3 $
N5 E8 N6 E23 N37 $ PTR= E30 FUS=[YR=2007] U3 R3 E7
BAL=[YR=2007] E19 S7 W16 N4 U3 L3 $ D3 R3 S4 E16 S14 E5
S19 W16 N6 W6 N10 W12 N21 $ W30 $ .

## EXTRA FEATURES

| LN | OB/XF CODE | DESCRIPTION | BLD | CAP | L | W | UNITS | UT | Adj R | ADJ UNIT PRICE | ORIG COND | YEAR ON | YEAR ACTUAL | Q | % COND | OB/XF MKT VALUE | NOTES |
|---|---|---|---|---|---|---|---|---|---|---|---|---|---|---|---|---|---|
| 1 | 0811 | CONCRETE B | 0 | 100 | 0 | 0 | 737.00 | SF | 5.20 | 5.20 | 100 | 2007 | 2007 | 3 | 89 | 3,411 | |
| 2 | 0500 | FP-PRE FAB | 0 | 100 | 0 | 0 | 1.00 | UT | 3,500.00 | 3,500.00 | 100 | 2007 | 2007 | 3 | 92 | 3,220 | |
| 3 | 0479 | VF PICKET | 0 | 100 | 0 | 0 | 132.00 | LF | 10.00 | 10.00 | 100 | 2013 | 2013 | 3 | 87 | 1,148 | |
| 4 | 0476 | VF 6 SBPL | 0 | 100 | 0 | 0 | 30.00 | LF | 32.00 | 32.00 | 100 | 2013 | 2013 | 3 | 87 | 835 | |
| 5 | 1242 | WD DECK A | 0 | 100 | 12 | 11 | 132.00 | SF | 10.00 | 10.00 | 100 | 2016 | 2016 | 3 | 78 | 1,030 | |
| 6 | 0855 | CONC PAVER | 0 | 100 | 0 | 0 | 80.00 | SF | 10.00 | 10.00 | 100 | 2017 | 2017 | 3 | 97 | 776 | |

## LAND DESCRIPTION

TOTAL OB/XF 10,420

| LN | USE CODE | CLS | LAND USE DESCRIPTION | CAP | RD | LOC ZONE | FRONT | DEPTH | TOT LND UTS | UNIT TYPE | DT | DPTH FACT | % COND | TOT ADJ | UNIT PRICE | ADJ UNIT PRICE | LAND VALUE | OTHER ADJUSTMENTS AND NOTES | YEAR | DENSITY | DECL | FRZ | YR | CONSRV |
|---|---|---|---|---|---|---|---|---|---|---|---|---|---|---|---|---|---|---|---|---|---|---|---|---|
| 1 | 000134 | C | SFR POND | 100 | | | 0.00 | 0.00 | 1.00 | LT | | 1.00 | 1.00 | 1.00 | 75,000.00 | 75,000.00 | 75,000 | | | | | | | |

REVIEW DATE 04/05/2017 BY KW Total Acres: 0.00 Total Land Value: 75,000 Market: 0 Agricultural: 0 Common: 75,000 PRINTED 08/02/2023 BY SYS