LOT 39
VILLAGES OF WOODBRIDGE #1
PB 7/229

O'BRIEN TRACY & THOMAS
95516 SONOMA DR
FERNANDINA BEACH, FL 32034

2023

40-2N-28-225V-0001-0390

NASSAU COUNTY PROPERTY

BUILDING CHARACTERISTICS

ELEMENT	CD	CONSTRUCTION
Exterior Wall	16	WD FR STUC 100
Roof Structur	08	IRREGULAR 100
Roof Cover	03	COMP SHNGL 100
Interior Wall	05	DRYWALL 100
Interior Floo	11	CLAY TILE 50
Interior Floo	14	CARPET 50
Air Condition	03	CENTRAL 100
Heating Type	04	AIR DUCTED 100
Bedrooms		3 100
Bathrooms		2.5 100
Frame	02	WOOD FRAME 100
Stories	2.	2. 100
Units		0 100
Occupancy	00	NONE 100
Quality	03	Quality Level 03

DOR CODE	0100	SINGLE FAMILY	
MAP NUM		MKT AREA	04
NEIGHBORHOOD/LOC	4068.00		

AREA TYPE	TOTAL GROSS AREA	PCT OF BASE	TOT ADJ AREA	SUBAREA MARKET VALUE
BAL	117	15	18	1,605
BAS	1,816	100	1,816	161,963
FGR	506	55	278	24,794
FOP	40	30	12	1,070
FOP	149	30	45	4,014
FUS	912	100	912	81,339
TOTALS	3,540		3,081	274,785

MARKET ADJUSTMENTS

TYPE	MDL	EFF. AREA	TOT ADJ PTS	EFF. BASE RATE	REPL. COST NEW	AYB	EYB	ECON	FNCT		NORM	% COND
0100	01	3,081	106.2600	95.90	295,468	2008	2008	0	0	0	7.00	93.00

1 SINGLE FAM – 0% - 0 Heated Area: 2728 HX Base Yr

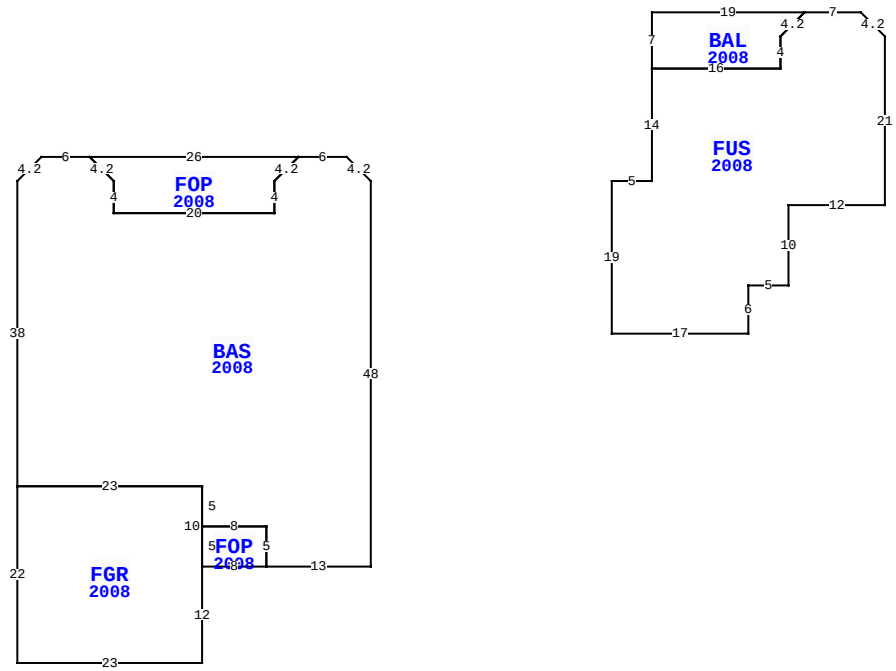

95516 SONOMA DR, FERNANDINA BEACH

BLD DATE	01/14/2009	RK	LGL DATE	05/18/2023	MLU
XF DATE			LAND DATE		
INC DATE			AG DATE		

VALUATION SUMMARY

VALUATION BY	STANDARD
Tax Group: 4	Tax Dist:
BUILDING MARKET VALUE	274,785
TOTAL MARKET OB/XF VALUE	3,122
TOTAL LAND VALUE - MARKET	75,000
TOTAL MARKET VALUE	352,907
SOH/AGL Deduction	45,716
ASSESSED VALUE	307,191
TOTAL EXEMPTION VALUE	0
BASE TAXABLE VALUE	307,191
TOTAL JUST VALUE	352,907
NCON VALUE	0
INCOME VALUE	
PREVIOUS YEAR MKT VALUE	319,705

PERMIT NUM	DESCRIPTION	AMT	ISSUED
C21629	CO ISSUED	0	01/16/2009
M14092	MECH OTHER	0	08/01/2008
B21629	NEW CONSTR	277,315	07/01/2008
R11383	REPAIR/RRF	1,500	07/01/2008
P13369	OTHER	0	07/01/2008

SALES DATA

OFF RECORD Number	DATE	TYPE INST	Q / U	V / I	RSN CD	SALE PRICE
2654/61	6/23/2023	WD	Q	I	01	425,000
GRANTOR: JENKINS AARON R						
GRANTEE: O'BRIEN TRACY & THO						
1621/0157	5/21/2009	WD	Q	I	01	239,000
GRANTOR: RICHMOND AMERICAN HOM						
GRANTEE: JENKINS AARON R						

BUILDING NOTES

EXTRA FEATURES

LN	OB/XF CODE	DESCRIPTION	BLD	CAP	L	W	UNITS	UT	Adj R	ADJ UNIT PRICE	ORIG COND	YEAR ON	YEAR ACTUAL	Q	% COND	OB/XF MKT VALUE	NOTES
1	0811	CONCRETE B	0	0	0	0	667.00	SF	5.20	5.20	100	2008	2008	3	90	3,122	

BUILDING DIMENSIONS

BAS=[YR=2008] U3 L3 W6 FOP=[YR=2008] W26 D3 R3 S4 E20 N4 U3 R3 $ L3 D3 S4 W20 N4 U3 L3 W6 D3 L3 S38 FGR=[YR=2008] S22 E23 N12 FOP=[YR=2008] E8 N5 W8 S5 $ N10 W23 $ E23 S5 E8 S5 E13 N48 $ PTR= E30 FUS=[YR=2008] E5 N14 BAL=[YR=2008] N7 E19 D3 L3 S4 W16 $ E16 N4 U3 R3 E7 D3 R3 S21 W12 S10 W5 S6 W17 N19 $ W30 $.

LAND DESCRIPTION

TOTAL OB/XF 3,122

LN	USE CODE	CLS	LAND USE DESCRIPTION	CAP	RD	LOC ZONE	FRONT	DEPTH	TOT LND UTS	UNIT TYPE	DT	DPTH FACT	% COND	TOT ADJ	UNIT PRICE	ADJ UNIT PRICE	LAND VALUE	OTHER ADJUSTMENTS AND NOTES	YEAR	DENSITY	DECL	FRZ	YR	CONSRV
1	000134	C	SFR POND	0			0.00	0.00	1.00	LT		1.00	1.00	1.00	75,000.00	75,000.00	75,000							

REVIEW DATE 02/16/2018 BY KWX Total Acres: 0.00 Total Land Value: 75,000 Market: 0 Agricultural: 0 Common: 75,000 PRINTED 08/02/2023 BY SYS