LOT 2
IN OR 676 PG 1921
OYSTERVILLE PB 5/358-359

WILCOX DALE M & ANITA G
96567 CALHOUN RD
FERNANDINA BEACH, FL 32034

2023

40-2N-28-1590-0002-0000

NASSAU COUNTY PROPERTY

BUILDING CHARACTERISTICS

ELEMENT	CD	CONSTRUCTION
Exterior Wall	12	CEDAR 100
Roof Structur	03	GABLE/HIP 100
Roof Cover	03	COMP SHNGL 100
Interior Wall	05	DRYWALL 90
Interior Wall	06	CUST PANEL 10
Interior Floo	14	CARPET 70
Interior Floo	11	CLAY TILE 30
Air Condition	03	CENTRAL 100
Heating Type	04	AIR DUCTED 100
Bedrooms		3 100
Bathrooms		2.5 100
Frame	02	WOOD FRAME 100
Stories	2.	2. 100
Units		0 100
Occupancy	00	NONE 100
Quality	01	Quality Level 01
DOR CODE	0100	SINGLE FAMILY
MAP NUM		MKT AREA 04
NEIGHBORHOOD/LOC	4017.00	

AREA TYPE	TOTAL GROSS AREA	PCT OF BASE	TOT ADJ AREA	SUBAREA MARKET VALUE
BAS	1,542	100	1,542	164,848
FOP	28	30	8	855
FSP	240	40	96	10,263
FUS	280	100	280	29,933
TOTALS	2,090		1,926	205,899

MARKET ADJUSTMENTS

TYPE	MDL	EFF. AREA	TOT ADJ PTS	EFF. BASE RATE	REPL. COST NEW	AYB	EYB	ECON	FNCT		NORM	% COND
0900	01	1,926	104.0760	123.59	238,034	1995	1995	0	0	0	13.50	86.50

1 SNGL FAM – 100% - 1996 Heated Area: 1822 HX Base Yr 1996

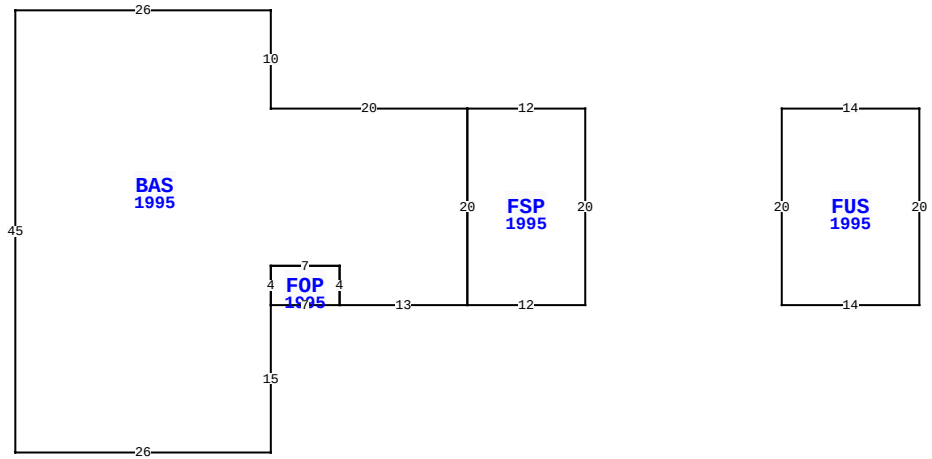

96567 CALHOUN RD, FERNANDINA BEACH

BLD DATE		LGL DATE	
XF DATE		LAND DATE	
INC DATE		AG DATE	

VALUATION SUMMARY

VALUATION BY		STANDARD
Tax Group: 4	Tax Dist:	
BUILDING MARKET VALUE		223,782
TOTAL MARKET OB/XF VALUE		14,272
TOTAL LAND VALUE - MARKET		357,000
TOTAL MARKET VALUE		595,054
SOH/AGL Deduction		360,405
ASSESSED VALUE		234,649
TOTAL EXEMPTION VALUE	HX HB	50,000
BASE TAXABLE VALUE		184,649
TOTAL JUST VALUE		595,054
NCON VALUE		0
INCOME VALUE		
PREVIOUS YEAR MKT VALUE		420,754

PERMIT NUM	DESCRIPTION	AMT	ISSUED

SALES DATA

OFF RECORD Number	DATE	TYPE INST	Q / U	V / I	RSN CD	SALE PRICE
0676/1921	3/15/1993	WD	Q	I		51,900

GRANTOR: THOMPSON ALBIN C JR

GRANTEE: WILCOX DALE & ANITA

BUILDING NOTES

BUILDING DIMENSIONS

FSP=[YR=1995] W12 BAS=[YR=1995] W20 N10 W26 S45 E26 N15
FOP=[YR=1995] E7 N4 W7 S4$ N4 E7 S4 E13 N20$ S20 E12 N20$
PTR=E20 FUS=[YR=1995] E14 S20 W14 N20$ W20$.

EXTRA FEATURES

LN	OB/XF CODE	DESCRIPTION	BLD	CAP	L	W	UNITS	UT	Adj R	ADJ UNIT PRICE	ORIG COND	YEAR ON	YEAR ACTUAL	Q	% COND	OB/XF MKT VALUE	NOTES
1	0510	GARAGE WD-	0	100	30	24	720.00	SF	35.00	35.00	100	2003	2003	3	36	9,072	
2	1242	WD DECK A	0	100	6	24	144.00	SF	10.00	10.00	100	1995	1995	3	20	288	
3	0500	FP-PRE FAB	0	100	0	0	1.00	UT	3,500.00	3,500.00	100	1995	1995	3	79	2,765	
4	1242	WD DECK A	0	100	0	0	976.00	SF	10.00	10.00	100	2003	2003	3	22	2,147	

LAND DESCRIPTION

TOTAL OB/XF 14,272

LN	USE CODE	CLS	LAND USE DESCRIPTION	CAP	RD	LOC ZONE	FRONT	DEPTH	TOT LND UTS	UNIT TYPE	DT	DPTH FACT	% COND	TOT ADJ	UNIT PRICE	ADJ UNIT PRICE	LAND VALUE	OTHER ADJUSTMENTS AND NOTES	YEAR	DENSITY	DECL	FRZ	YR	CONSRV
1	000116	C	SFR MARSH	100		OR	0.00	0.00	2.38	AC		1.00	1.00	1.00	150,000.00	150,000.00	357,000							

REVIEW DATE 11/30/2017 BY KWX Total Acres: 2.38 Total Land Value: 357,000 Market: 0 Agricultural: 0 Common: 357,000 PRINTED 08/02/2023 BY SYS

LOT 2
IN OR 676 PG 1921
OYSTERVILLE PB 5/358-359

WILCOX DALE M & ANITA G
96567 CALHOUN RD
FERNANDINA BEACH, FL 32034

2023

40-2N-28-1590-0002-0000

NASSAU COUNTY PROPERTY

BUILDING CHARACTERISTICS

ELEMENT	CD	CONSTRUCTION
Exterior Wall	12	CEDAR 100
Roof Structur	03	GABLE/HIP 100
Roof Cover	03	COMP SHNGL 100
Interior Wall	05	DRYWALL 100
Interior Floo	03	CONC FINSH 100
Air Condition	02	WINDOW 100
Heating Type	01	NONE 100
Bedrooms		0 100
Bathrooms		1 100
Frame	03	MASONRY 100
Stories	0	0 100
Units		0 100
Occupancy	00	NONE 100
Quality	01	Quality Level 01

DOR CODE 0100 SINGLE FAMILY
MAP NUM | MKT AREA 04
NEIGHBORHOOD/LOC 4017.00

AREA TYPE	TOTAL GROSS AREA	PCT OF BASE	TOT ADJ AREA	SUBAREA MARKET VALUE
BAS	335	100	335	8,928
FCP	529	25	132	3,518
FUS	204	100	204	5,437
TOTALS	1,068		671	17,883

MARKET ADJUSTMENTS

TYPE	MDL	EFF. AREA	TOT ADJ PTS	EFF. BASE RATE	REPL. COST NEW	AYB	EYB	ECON	FNCT	AP	NORM	% COND
0150	01	671	96.0300	48.02	32,221	2003	2003	0	0	35	9.50	55.50

2 ACCESORY U – 100% - 1996 Heated Area: 539 HX Base Yr 1996

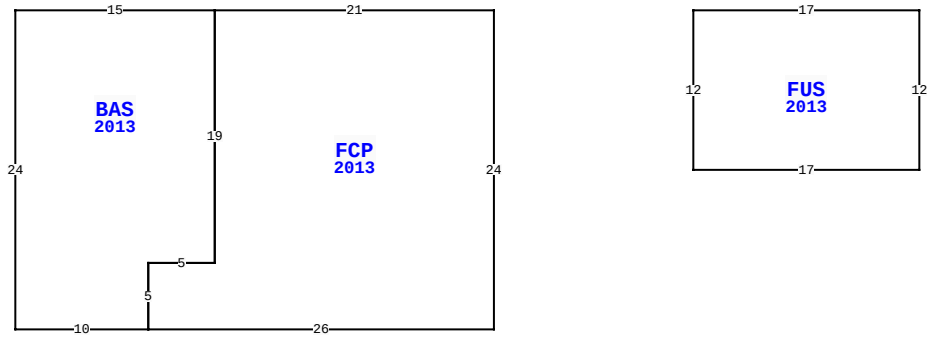

96567 CALHOUN RD, FERNANDINA BEACH

BLD DATE		LGL DATE	
XF DATE		LAND DATE	
INC DATE		AG DATE	

NASSAU COUNTY PROPERTY — VALUATION SUMMARY

VALUATION BY		STANDARD
Tax Group: 4	Tax Dist:	
BUILDING MARKET VALUE		223,782
TOTAL MARKET OB/XF VALUE		14,272
TOTAL LAND VALUE - MARKET		357,000
TOTAL MARKET VALUE		595,054
SOH/AGL Deduction		360,405
ASSESSED VALUE		234,649
TOTAL EXEMPTION VALUE	HX HB	50,000
BASE TAXABLE VALUE		184,649
TOTAL JUST VALUE		595,054
NCON VALUE		0
INCOME VALUE		
PREVIOUS YEAR MKT VALUE		420,754

PERMIT NUM	DESCRIPTION	AMT	ISSUED

SALES DATA

OFF RECORD Number	DATE	TYPE INST	Q / U	V / I	RSN CD	SALE PRICE
0676/1921	3/15/1993	WD	Q	I		51,900

GRANTOR: THOMPSON ALBIN C JR
GRANTEE: WILCOX DALE & ANITA

BUILDING NOTES

BUILDING DIMENSIONS

FCP=[YR=2013] W21 BAS=[YR=2013] W15 S24 E10 N5 E5 N19$ S19 W5 S5 E26 N24$ PTR=E15 FUS=[YR=2013] E17 S12 W17 N12$ W15$.

EXTRA FEATURES

L N	OB/XF CODE	DESCRIPTION	BLD	CAP	L	W	UNITS	UT	Adj R	ADJ UNIT PRICE	ORIG COND	YEAR ON	YEAR ACTUAL	Q	% COND	OB/XF MKT VALUE	NOTES

LAND DESCRIPTION

TOTAL OB/XF 0

L N	USE CODE	CLS	LAND USE DESCRIPTION	CAP	R D	LOC ZONE	FRONT	DEPTH	TOT LND UTS	UNIT TYPE	D T	DPTH FACT	% COND	TOT ADJ	UNIT PRICE	ADJ UNIT PRICE	LAND VALUE	OTHER ADJUSTMENTS AND NOTES	YEAR	DENSITY	DECL	FRZ	YR	CONSRV

REVIEW DATE 11/30/2017 BY KWX Total Acres: 2.38 Total Land Value: 357,000 Market: 0 Agricultural: 0 Common: 357,000 PRINTED 08/02/2023 BY SYS