LOT 45
IN OR 2210/1833
OTTER RUN PB 5/156

CREGER JOSHUA & TORI L
95109 PALMETTO TRL
FERNANDINA BEACH, FL 32034

2023

40-2N-28-1590-0045-0000

NASSAU COUNTY PROPERTY

BUILDING CHARACTERISTICS

ELEMENT	CD	CONSTRUCTION
Exterior Wall	30	VINYL 80
Exterior Wall	31	HARDIE BRD 20
Roof Structur	03	GABLE/HIP 100
Roof Cover	03	COMP SHNGL 100
Interior Wall	05	DRYWALL 100
Interior Floo	13	LVT/LAMNT 60
Interior Floo	11	CLAY TILE 40
Air Condition	03	CENTRAL 100
Heating Type	04	AIR DUCTED 100
Bedrooms		3 100
Bathrooms		2 100
Frame	02	WOOD FRAME 100
Stories	1.	1. 100
Units		0 100
Occupancy	00	NONE 100
Quality	02	Quality Level 02
DOR CODE	0100	SINGLE FAMILY
MAP NUM		MKT AREA 04
NEIGHBORHOOD/LOC	4013.00	

AREA TYPE	TOTAL GROSS AREA	PCT OF BASE	TOT ADJ AREA	SUBAREA MARKET VALUE
BAS	1,521	100	1,521	171,085
FGR	380	55	209	23,508
FOP	29	30	9	1,012
FSP	270	40	108	12,148
PTO	182	5	9	1,012
TOTALS	2,382		1,856	208,766

MARKET ADJUSTMENTS

TYPE	MDL	EFF. AREA	TOT ADJ PTS	EFF. BASE RATE	REPL. COST NEW	AYB	EYB	ECON	FNCT		NORM	% COND
0900	01	1,856	106.1340	126.03	233,912	1991	2000	0	0	0	10.75	89.25

1 SNGL FAM – 100% - 2019 Heated Area: 1521 HX Base Yr 2019

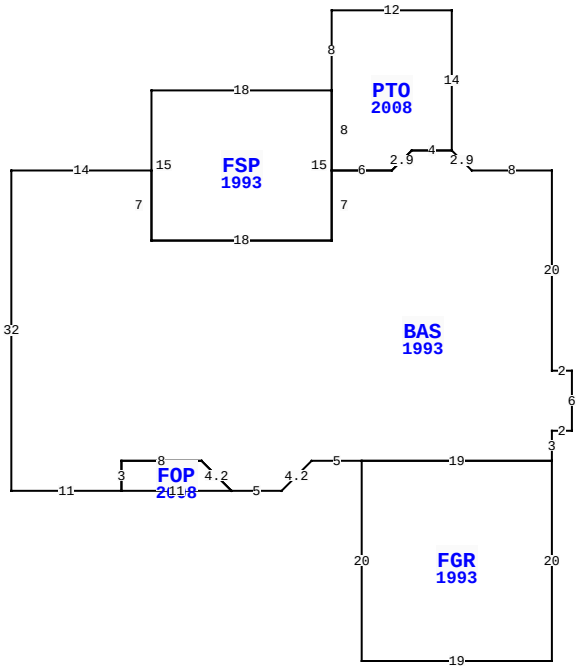

95109 PALMETTO TRL, FERNANDINA BEACH

BLD DATE		LGL DATE	
XF DATE		LAND DATE	05/22/2023 MLU
INC DATE		AG DATE	

VALUATION SUMMARY

VALUATION BY		STANDARD
Tax Group: 4	Tax Dist:	
BUILDING MARKET VALUE		208,766
TOTAL MARKET OB/XF VALUE		7,274
TOTAL LAND VALUE - MARKET		75,000
TOTAL MARKET VALUE		291,040
SOH/AGL Deduction		91,550
ASSESSED VALUE		199,490
TOTAL EXEMPTION VALUE	HX HB	50,000
BASE TAXABLE VALUE		149,490
TOTAL JUST VALUE		291,040
NCON VALUE		0
INCOME VALUE		
PREVIOUS YEAR MKT VALUE		252,413

PERMIT NUM	DESCRIPTION	AMT	ISSUED
94-01225	ADDITION	2,096	08/01/1994
7230	NEW CONSTR	56,266	05/16/1991

SALES DATA

OFF RECORD Number	DATE	TYPE INST	Q U	V I	RSN CD	SALE PRICE
2210/1833	7/12/2018	WD	Q	I	01	235,000
GRANTOR: COLEMAN STEVEN & JUST						
GRANTEE: CREGER JOSHUA & TOR						
1088/0235	10/16/2002	WD	Q	I		135,000
GRANTOR: BLAKE COURTNEY V						
GRANTEE: COLEMAN STEVEN R						

BUILDING NOTES

BUILDING DIMENSIONS

BAS=[YR=1993] W8 L2 U2 PTO=[YR=2008] N14 W12 S8 FSP=[YR=1993] W18 S15 E18 N15 $ S8 E6 R2 U2 E4$ W4 D2 L2 W6 S7 W18 N7 W14 S32 E11 FOP=[YR=2008] E11 U3 L3 W8 S3$ N3 E8 R3 D3 E5 R3 U3 E5 FGR=[YR=1993] S20 E19 N20 W19$ E19 N3 E2 N6 W2 N20$.

EXTRA FEATURES

LN	OB/XF CODE	DESCRIPTION	BLD	CAP	L	W	UNITS	UT	Adj R	ADJ UNIT PRICE	ORIG COND	YEAR ON	YEAR ACTUAL	Q	% COND	OB/XF MKT VALUE	NOTES
1	0812	CONCRETE C	0	100	0	0	1,772.00	SF	4.00	4.00	100	1991	1991	3	64	4,536	
2	0500	FP-PRE FAB	0	100	0	0	1.00	UT	3,500.00	3,500.00	100	1991	1991	3	72	2,520	
3	0810	CONCRETE A	0	100	6	8	48.00	SF	6.50	6.50	100	1994	1994	3	70	218	

LAND DESCRIPTION

TOTAL OB/XF 7,274

LN	USE CODE	CLS	LAND USE DESCRIPTION	CAP	RD	LOC ZONE	FRONT	DEPTH	TOT LND UTS	UNIT TYPE	DT	DPTH FACT	% COND	TOT ADJ	UNIT PRICE	ADJ UNIT PRICE	LAND VALUE	OTHER ADJUSTMENTS AND NOTES	YEAR	DENSITY	DECL	FRZ	YR	CONSRV
1	000100	C	SFR	100		RS-1	0.00	0.00	1.00	LT		1.00	1.00	1.00	75,000.00	75,000.00	75,000							

REVIEW DATE 07/02/2020 BY KWA Total Acres: 0.00 Total Land Value: 75,000 Market: 0 Agricultural: 0 Common: 75,000 PRINTED 08/02/2023 BY SYS