LOT 142
BARNWELL MANOR PHASE 2
OR 2362/1884

DUGGAN KEVIN J REV TRUST/DUGGAN KEVIN J TRUSTEE
93704 NEWMARKET LANE
FERNANDINA BEACH, FL 32034

**2023**

**39-2N-28-0141-0142-0000**

## NASSAU COUNTY PROPERTY



## BUILDING CHARACTERISTICS

| ELEMENT | CD | CONSTRUCTION |
|---|---|---|
| Exterior Wall | 31 | HARDIE BRD 100 |
| Roof Structur | 03 | GABLE/HIP 100 |
| Roof Cover | 03 | COMP SHNGL 100 |
| Interior Wall | 05 | DRYWALL 100 |
| Interior Floo | 13 | LVT/LAMNT 90 |
| Interior Floo | 11 | CLAY TILE 10 |
| Air Condition | 03 | CENTRAL 100 |
| Heating Type | 04 | AIR DUCTED 100 |
| Bedrooms | | 4 100 |
| Bathrooms | | 4.5 100 |
| Frame | 03 | MASONRY 100 |
| Stories | 2. | 2. 100 |
| Units | | 0 100 |
| Occupancy | 00 | NONE 100 |
| Quality | 02 | Quality Level 02 |
| DOR CODE | 0100 | SINGLE FAMILY |
| MAP NUM | | MKT AREA 04 |
| NEIGHBORHOOD/LOC | 4088.00 | |

| AREA TYPE | TOTAL GROSS AREA | PCT OF BASE | TOT ADJ AREA | SUBAREA MARKET VALUE |
|---|---|---|---|---|
| BAS | 2,236 | 100 | 2,236 | 256,760 |
| FGR | 240 | 55 | 132 | 15,158 |
| FGR | 441 | 55 | 243 | 27,904 |
| FOP | 85 | 30 | 26 | 2,986 |
| FSP | 162 | 40 | 65 | 7,464 |
| FST | 24 | 55 | 13 | 1,493 |
| FUS | 1,239 | 100 | 1,239 | 142,274 |
| STR | 28 | 10 | 3 | 344 |
| TOTALS | 4,455 | | 3,957 | 454,382 |

## MARKET ADJUSTMENTS

| TYPE | MDL | EFF. AREA | TOT ADJ PTS | EFF. BASE RATE | REPL. COST NEW | AYB | EYB | ECON | FNCT | | NORM | % COND |
|---|---|---|---|---|---|---|---|---|---|---|---|---|
| 0900 | 01 | 3,957 | 96.7005 | 114.83 | 454,382 | 2022 | 2022 | 0 | 0 | 0 | 0.00 | 100.00 |

1 SNGL FAM – 100% - 2023 Heated Area: 3475 HX Base Yr 2023

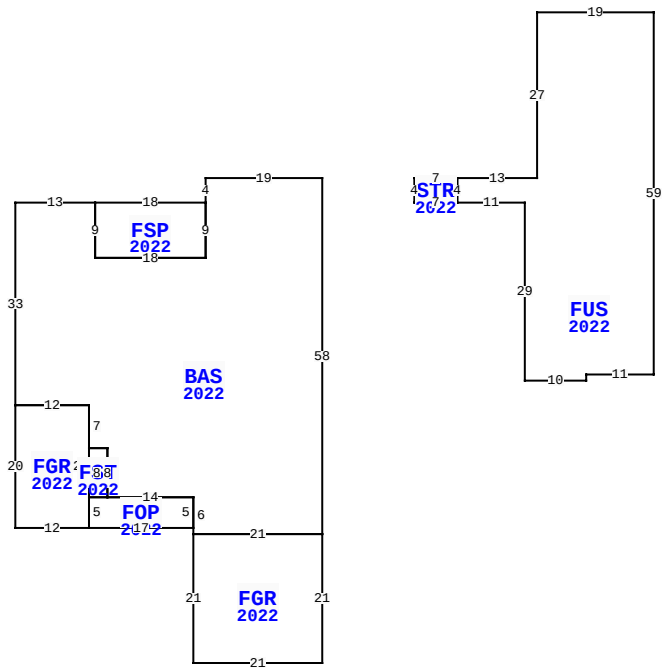





93704 NEWMARKET LN, FERNANDINA BEACH

| | | | |
|---|---|---|---|
| BLD DATE | | LGL DATE | |
| XF DATE | | LAND DATE | 06/05/2023 MLU |
| INC DATE | | AG DATE | |

## VALUATION SUMMARY

| | | |
|---|---|---|
| VALUATION BY | | STANDARD |
| Tax Group: 4 | Tax Dist: | |
| BUILDING MARKET VALUE | | 454,382 |
| TOTAL MARKET OB/XF VALUE | | 12,160 |
| TOTAL LAND VALUE - MARKET | | 75,000 |
| TOTAL MARKET VALUE | | 541,542 |
| SOH/AGL Deduction | | 125,313 |
| ASSESSED VALUE | | 416,229 |
| TOTAL EXEMPTION VALUE | HX HB | 50,000 |
| BASE TAXABLE VALUE | | 366,229 |
| TOTAL JUST VALUE | | 541,542 |
| NCON VALUE | | 466,542 |
| INCOME VALUE | | |
| PREVIOUS YEAR MKT VALUE | | 65,000 |

| PERMIT NUM | DESCRIPTION | AMT | ISSUED |
|---|---|---|---|
| B2113569 | NEW CONSTR | 562,586 | 10/05/2021 |

## SALES DATA

| OFF RECORD Number | DATE | TYPE INST | Q / U | V / I | RSN CD | SALE PRICE |
|---|---|---|---|---|---|---|
| 2576/0894 | 6/30/2022 | SW | Q | I | 01 | 669,400 |

GRANTOR: AVH NORTH FLORIDA LLC
GRANTEE: DUGGAN KEVIN J REVO

## BUILDING NOTES

## BUILDING DIMENSIONS

BAS=[YR=2022] W19 S4 FSP=[YR=2022] W18 S9 E18 N9$ S9 W18 N9 W13 S33 FGR=[YR=2022] S20 E12 FOP=[YR=2022] E17 N5 W14 FST=[YR=2022] N8W3S8E3$ W3S5$ N20 W12$ E12 S7 E3 S8 E14 S6 FGR=[YR=2022] S21 E21 N21 W21$ E21 N58$ PTR=E15 STR=[YR=2022] E7 FUS=[YR=2022] E13 N27 E19 S59 W11 S1 W10 N29 W11 N4$ S4 W7 N4$ W15$ .

## EXTRA FEATURES

| LN | OB/XF CODE | DESCRIPTION | BLD | CAP | L | W | UNITS | UT | Adj R | ADJ UNIT PRICE | ORIG COND | YEAR ON | YEAR ACTUAL | Q | % COND | OB/XF MKT VALUE | NOTES |
|---|---|---|---|---|---|---|---|---|---|---|---|---|---|---|---|---|---|
| 1 | 0855 | CONC PAVER | 0 | 100 | 0 | 0 | 1,216.00 | SF | 10.00 | 10.00 | 100 | 2022 | 2022 | 3 | 100 | 12,160 | |

## LAND DESCRIPTION

TOTAL OB/XF 12,160

| LN | USE CODE | CLS | LAND USE DESCRIPTION | CAP | RD | LOC ZONE | FRONT | DEPTH | TOT LND UTS | UNIT TYPE | DT | DPTH FACT | % COND | TOT ADJ | UNIT PRICE | ADJ UNIT PRICE | LAND VALUE | OTHER ADJUSTMENTS AND NOTES | YEAR | DENSITY | DECL | FRZ | YR | CONSRV |
|---|---|---|---|---|---|---|---|---|---|---|---|---|---|---|---|---|---|---|---|---|---|---|---|---|
| 1 | 000100 | C | SFR | 100 | | | 0.00 | 0.00 | 1.00 | LT | | 1.00 | 1.00 | 1.00 | 75,000.00 | 75,000.00 | 75,000 | | | | | | | |

REVIEW DATE 09/20/2022 BY DJ Total Acres: 0.00 Total Land Value: 75,000 Market: 0 Agricultural: 0 Common: 75,000 PRINTED 08/02/2023 BY SYS