LOT 117
BARNWELL MANOR PHASE 2
OR 2362/1884

WAHL JEFFREY DEAN & MARY ANNA
94082 GOODWOOD DR
FERNANDINA BEACH, FL 32034

**2023**

**39-2N-28-0141-0117-0000**

## NASSAU COUNTY PROPERTY



## BUILDING CHARACTERISTICS

| ELEMENT | CD | CONSTRUCTION |
|---|---|---|
| Exterior Wall | 31 | HARDIE BRD 100 |
| Roof Structur | 08 | IRREGULAR 100 |
| Roof Cover | 03 | COMP SHNGL 100 |
| Interior Wall | 05 | DRYWALL 100 |
| Interior Floo | 13 | LVT/LAMNT 60 |
| Interior Floo | 14 | CARPET 40 |
| Air Condition | 03 | CENTRAL 100 |
| Heating Type | 04 | AIR DUCTED 100 |
| Bedrooms | | 5 100 |
| Bathrooms | | 4 100 |
| Frame | 02 | WOOD FRAME 100 |
| Stories | 2. | 2. 100 |
| Units | | 0 100 |
| Occupancy | 00 | NONE 100 |
| Quality | 02 | Quality Level 02 |
| DOR CODE | 0100 | SINGLE FAMILY |
| MAP NUM | | MKT AREA 04 |
| NEIGHBORHOOD/LOC | 4088.00 | |

| AREA TYPE | TOTAL GROSS AREA | PCT OF BASE | TOT ADJ AREA | SUBAREA MARKET VALUE |
|---|---|---|---|---|
| BAS | 1,333 | 100 | 1,333 | 151,855 |
| FGR | 685 | 55 | 377 | 42,948 |
| FOP | 173 | 30 | 52 | 5,924 |
| FSP | 330 | 40 | 132 | 15,037 |
| FUS | 1,874 | 100 | 1,874 | 213,486 |
| STR | 80 | 10 | 8 | 911 |
| TOTALS | 4,475 | | 3,776 | 430,162 |

## MARKET ADJUSTMENTS

| TYPE | MDL | EFF. AREA | TOT ADJ PTS | EFF. BASE RATE | REPL. COST NEW | AYB | EYB | ECON | FNCT | | NORM | % COND |
|---|---|---|---|---|---|---|---|---|---|---|---|---|
| 0900 | 01 | 3,776 | 95.9310 | 113.92 | 430,162 | 2021 | 2021 | 0 | 0 | 0 | 0.00 | 100.00 |

1 SNGL FAM – 100% - 2022 Heated Area: 3207 HX Base Yr 2022

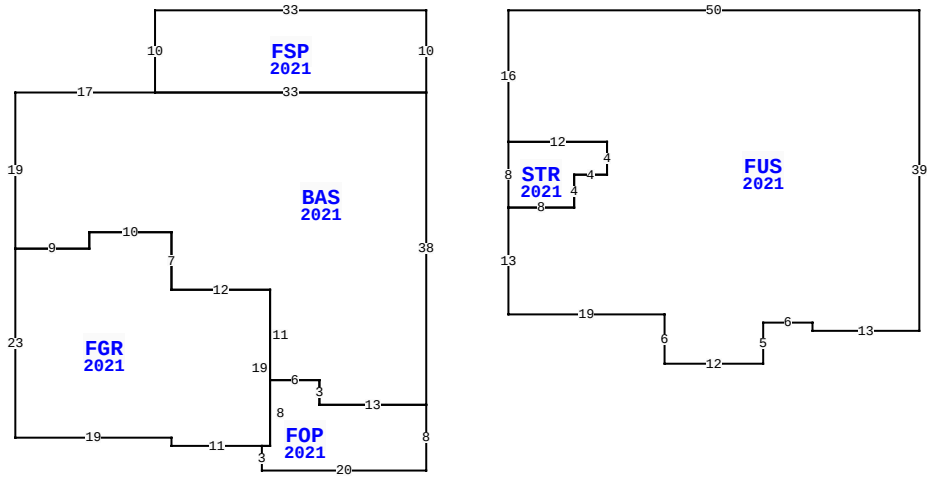


94082 GOODWOOD DR, FERNANDINA BEACH

| | | | |
|---|---|---|---|
| BLD DATE | | LGL DATE | |
| XF DATE | | LAND DATE | 06/05/2023 MLU |
| INC DATE | | AG DATE | |

## VALUATION SUMMARY

| | | |
|---|---|---|
| VALUATION BY | | STANDARD |
| Tax Group: 4 | Tax Dist: | |
| BUILDING MARKET VALUE | | 430,162 |
| TOTAL MARKET OB/XF VALUE | | 12,950 |
| TOTAL LAND VALUE - MARKET | | 75,000 |
| TOTAL MARKET VALUE | | 518,112 |
| SOH/AGL Deduction | | 72,686 |
| ASSESSED VALUE | | 445,426 |
| TOTAL EXEMPTION VALUE | HX HB | 50,000 |
| BASE TAXABLE VALUE | | 395,426 |
| TOTAL JUST VALUE | | 518,112 |
| NCON VALUE | | 0 |
| INCOME VALUE | | |
| PREVIOUS YEAR MKT VALUE | | 432,452 |

| PERMIT NUM | DESCRIPTION | AMT | ISSUED |
|---|---|---|---|
| C2105667 | CO ISSUED | 0 | 01/03/2022 |
| B2105667 | NEW CONSTR | 441,152 | 05/04/2021 |

## SALES DATA

| OFF RECORD Number | DATE | TYPE INST | Q / U | V / I | RSN CD | SALE PRICE |
|---|---|---|---|---|---|---|
| 2538/1678 | 12/29/2021 | SW | Q | I | 01 | 576,200 |

GRANTOR: AVH NORTH FLORIDA LLC
GRANTEE: WAHL JEFFREY DEAN &

## BUILDING NOTES

## BUILDING DIMENSIONS

FSP=[YR=2021] W33 S10 BAS=[YR=2021] W17 S19 FGR=[YR=2021] S23 E19 S1 E11 FOP=[YR=2021] S3 E20 N8 W13 N3 W6 S8 W1$ E1 N19 W12 N7 W10 S2 W9$ E9 N2 E10 S7 E12 S11 E6 S3 E13 N38 W33$ E33 N10$ PTR=E10 FUS=[YR=2021] E50 S39 W13 N1 W6 S5 W12 N6 W19 N13 STR=[YR=2021] N8 E12 S4 W4 S4 W8$ E8 N4 E4 N4 W12 N16$ W10$.

## EXTRA FEATURES

| LN | OB/XF CODE | DESCRIPTION | BLD | CAP | L | W | UNITS | UT | Adj R | ADJ UNIT PRICE | ORIG COND | YEAR ON | YEAR ACTUAL | Q | % COND | OB/XF MKT VALUE | NOTES |
|---|---|---|---|---|---|---|---|---|---|---|---|---|---|---|---|---|---|
| 1 | 0855 | CONC PAVER | 0 | 100 | 0 | 0 | 1,256.00 | SF | 10.00 | 10.00 | 100 | 2021 | 2021 | 3 | 100 | 12,560 | |
| 2 | 0855 | CONC PAVER | 0 | 100 | 3 | 13 | 39.00 | SF | 10.00 | 10.00 | 100 | 2021 | 2021 | 3 | 100 | 390 | |

## LAND DESCRIPTION

TOTAL OB/XF 12,950

| LN | USE CODE | CLS | LAND USE DESCRIPTION | CAP | RD | LOC ZONE | FRONT | DEPTH | TOT LND UTS | UNIT TYPE | DT | DPTH FACT | % COND | TOT ADJ | UNIT PRICE | ADJ UNIT PRICE | LAND VALUE | OTHER ADJUSTMENTS AND NOTES | YEAR | DENSITY | DECL | FRZ | YR | CONSRV |
|---|---|---|---|---|---|---|---|---|---|---|---|---|---|---|---|---|---|---|---|---|---|---|---|---|
| 1 | 000134 | C | SFR POND | 100 | | | 0.00 | 0.00 | 1.00 | LT | | 1.00 | 1.00 | 1.00 | 75,000.00 | 75,000.00 | 75,000 | | | | | | | |

REVIEW DATE 01/20/2022 BY DJ Total Acres: 0.00 Total Land Value: 75,000 Market: 0 Agricultural: 0 Common: 75,000 PRINTED 08/02/2023 BY SYS